IPERL ELECTROMAGNETIC WATER METER

iPERL offers unmatched measurement precision with a R800 ratio for all its sizes between DN15 and 40. Unlike other static measurement sensors, iPERL uses remanent magnetic field technology that offers a linear measurement range even at very low working flow rates.







MATERIAL CHARACTERISTICS

External Shell: Thermoplastic.

Body/Meter: composite.

Flow Tube: Polyphenylene sulfide alloy.

OPERATING CHARACTERISTICS

Installation Flexibility: Offers constant metrological performance.

Flow Detection: it has an automatic flow direction detection system.

Intelligent Communication: low consumption radio technology in 868 MHz or 433 MHz.

Operating Ranges: The maximum working pressure is 16 bar.

MODELS

CODE	SIZE	CONNECTION	Q M3	L (MM)	UNITS/BOX	RRP (€)
10004059	20	3/4”	2.5	190	**1**	**391**
10004055	25	1”	3.5	260	**1**	**440**
10004056	30	1-1/4”	6	260	**1**	**517**
10004057	40	1-1/2”	10	300	**1**	**550**

ACCESSORIES



UNIONS

SEE PAGE

PRESSURE LOSS

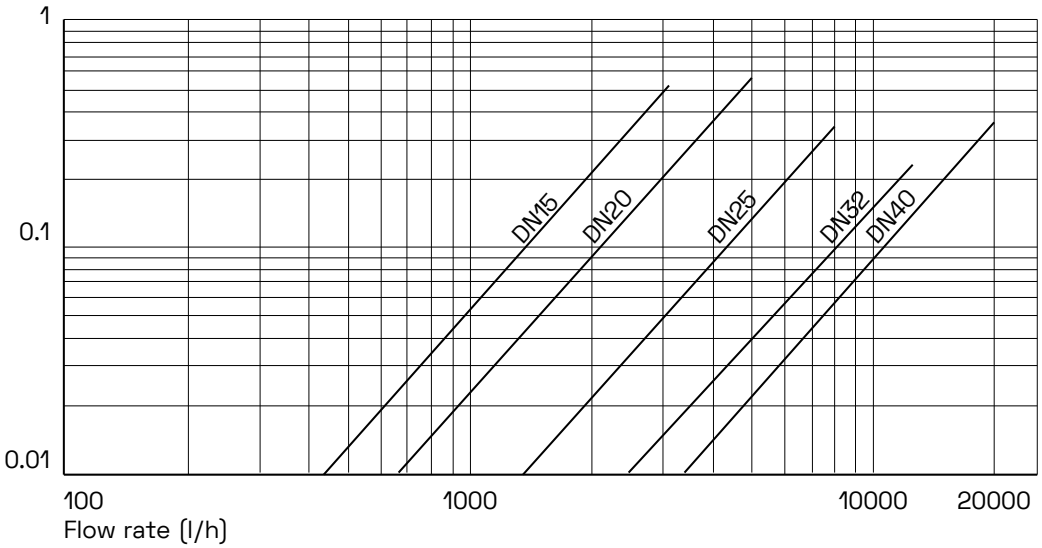

FLOW RATE

DN	FLOW RATE PERMANENT	CAUDAL DE ARRANQUE	RATIO "R"	FLOW RATE MAXIMUM	MINIMUM FLOW	CAUDAL DE TRANSITION
	Q3 m3/h	l/h		Q4 m3/h	Q1 l/h	Q2 l/h
15	2,5	1	800	3,125	3,13	5
20	4	1,6	800	5	5	8
25	6,3	2,5	800	7,875	7,88	12,6
32	10	4	800	12,5	12,5	20
40	16	6,4	800	20	20	32

DIMENSIONS

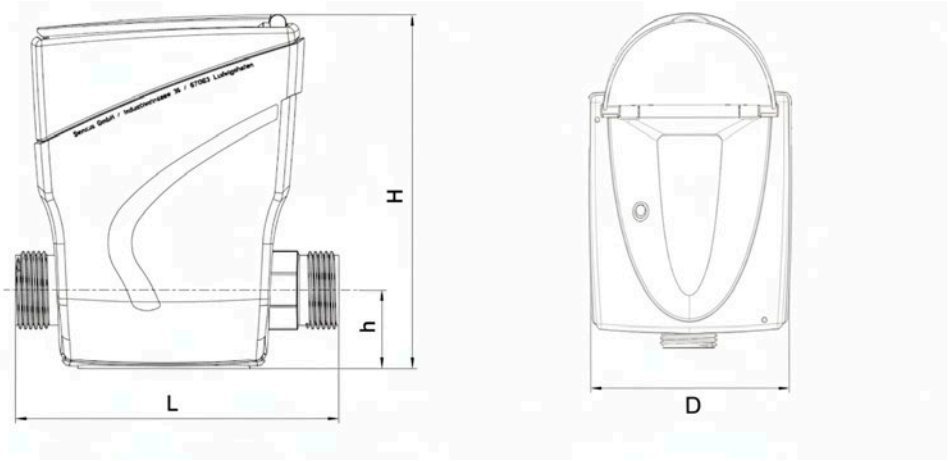

DN	CONNECTION	L	D	H	H	KG
20	1"	190	94	120	**26**	**0,85**
25	1¼"	260	114	138	**40**	**1,65**
32	1½"	260	114	138	**40**	**1,65**
40	2"	300	114	138	**40**	**1,75**