CONNECTION FITTING

The connection fitting is a piece that allows the water meter to be coupled to the installation pipe. It is made up of three fundamental pieces: a male thread that connects to the pipe, a female thread (idle nut) that is threaded to the body of the meter, and an O-ring.







MATERIAL CHARACTERISTICS

Material: Brass

Gasket: EPDM

OPERATING CHARACTERISTICS

Idler nut tightens the threads against the body of the meter to seal the gasket and prevent leaks

Allows you to install or replace the meter easily and quickly, without the need to cut or weld the pipes

Available from 1/2 inch (1/2") to 2 inch (2")

MODELS

CODE	MALE THREAD	FEMALE THREAD	RRP (€)
10011026	1/2"	7/8"	4
10011027	1/2"	3/4"	4
10011029	3/4"	1"	6
10011030	1"	1-1/4"	11
10011031	1-1/4"	1-1/2"	17
10011032	1-1/2"	2"	22
10011033	2"	2-1/2"	56

RELATED ARTICLES



single-jet water meter

SEE PAGE



multi-jet water meter

SEE PAGE

DIMENSIONS

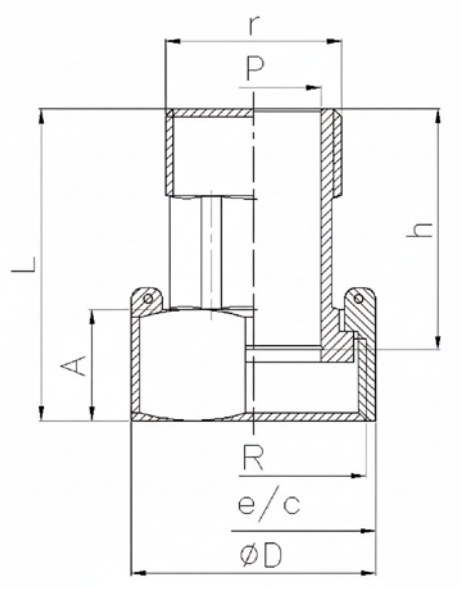

r	R	ØP	h	A	L	NUT	ØD	Weight (kg)
1/2"	3/4"	14	37,5	15	46,5	29	32	0,07
3/4"	1"	20	45,5	17	56,5	36	40,5	0,115
1"	1 1/4"	26	45,5	20,5	59,5	46	52	0,205
1 1/4"	1 1/2"	33	55,5	22,5	69,5	52,5	59	0,32
1 1/2"	2"	39	65,5	24	80	65,5	70	0,495