PULSE TOTALIZER

The digital pulse totalizer is designed for pulse counting in industrial environments, allowing events such as flow pulses, machine cycles or binary signals to be recorded.







MATERIAL CHARACTERISTICS

Housing: Technical plastic

Screen: LCD

Terminals: Panel type screw terminals

Protection: Front panel IP66

OPERATING CHARACTERISTICS

Counting range: 0 – 99 999 999 pulses (8 digits)

Maximum input speed: Up to 1 kHz (0,5 ms minimum pulse width)

Mode of operation: Count up (UP), with manual or external reset

Working temperature: –10°C to +55°C (non-condensing)

Applications: Pulse registration in irrigation flow systems, industrial machinery

MODELS

CODE	MODEL	RRP (€)
10011043	TOTALIZER IFLOWCONTROL	**99**

RELATED ARTICLES



single-jet water meter

SEE PAGE



multi-jet water meter

SEE PAGE

DIMENSIONS

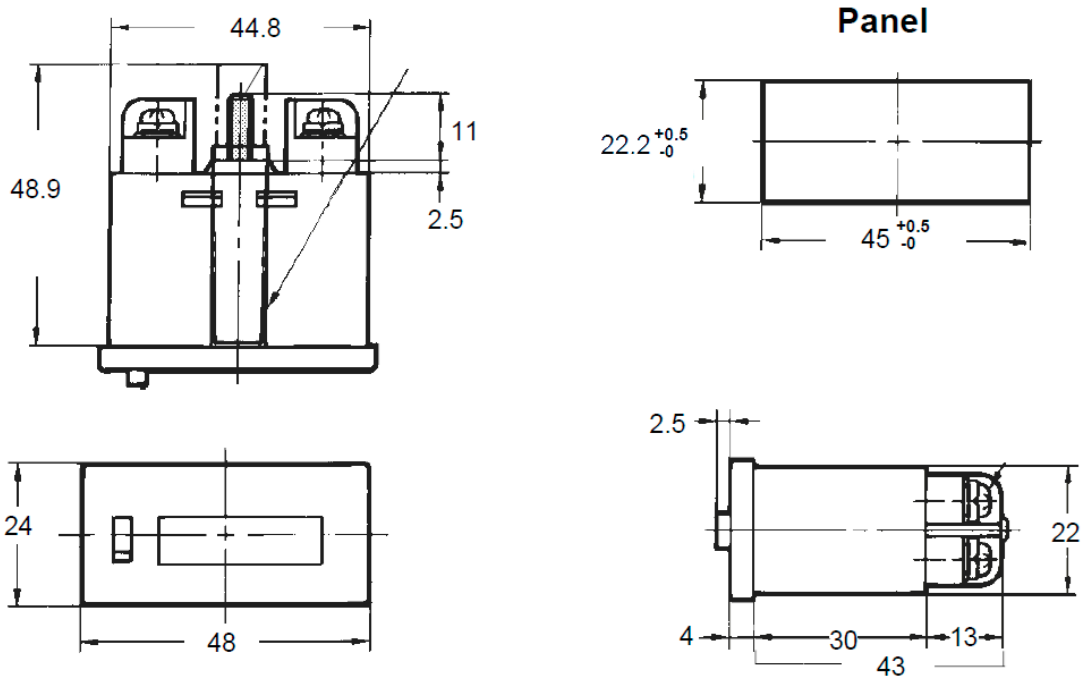

CONNECTION DIAGRAM

