RAPHAEL HYDRAULIC VALVE

The Raphael diaphragm valve is a hydraulic control valve designed to regulate flow and pressure in water distribution and irrigation systems. It is generally made of ductile cast iron with reinforced anti-corrosion coating and consists of a body, cover and a diaphragm. This design operates without a spring.









MATERIAL CHARACTERISTICS

Valve body and cover are made of ductile cast iron with an anti-corrosion Epoxy paint coating.

Diaphragm: made of reinforced EPDM rubber.

The screws and fixing elements are galvanized steel. OPERATING

CHARACTERISTICS

It is a hydraulic control valve in-line and angle design.

Available connections: Threaded and Flange.

Working pressures: PN10 and PN16

Suitable for use with pilot lights and accessories for safety functions.

MODELS

CODE	SIZE	CONNECTION	PN	RRP (€)
11036001	25	1" THREAD	16	**80**
11036002	40	1-1/2" THREAD	16	**98**
11036003	50	2" THREAD	16	**100**
11036004	65	2-1/2 THREAD	16	**193**
11036005	80	3" THREAD	16	**211**
11036006	80	3"D FLANGE	16	**217**
11036007	80	3" FLANGE	16	**258**
11036009	100	4"D FLANGE	16	**334**
11036008	100	4" FLANGE	16	**380**
11036010	125	5" FLANGE	16	**597**
11036011	150	6"D FLANGE	16	**680**
11036012	150	6" FLANGE	16	**820**
11036013	200	8" FLANGE	16	**1645**
11036014	250	10" FLANGE	16	**2778**
11036015	300	12" FLANGE	16	5790

PRESSURE LOSS

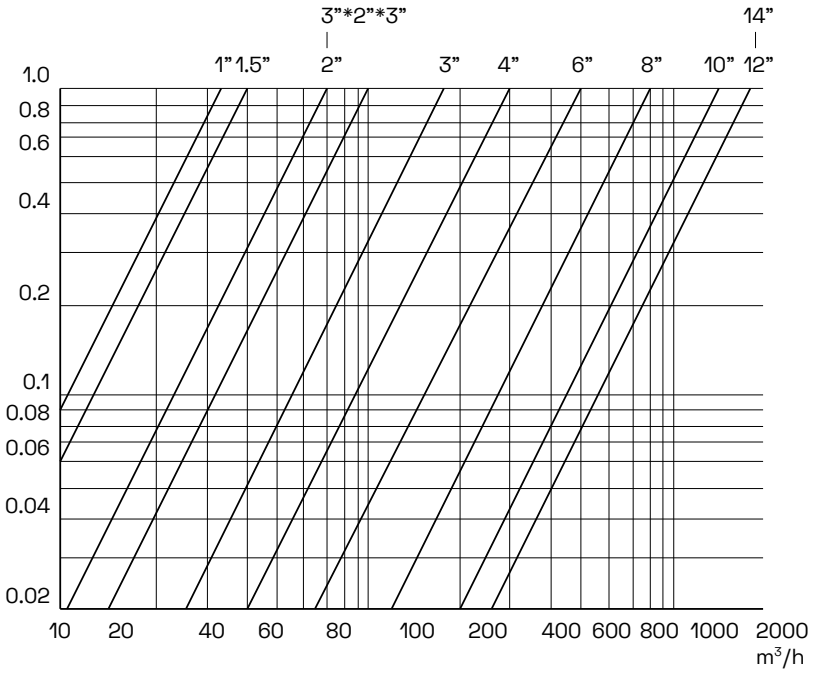

DIMENSIONS

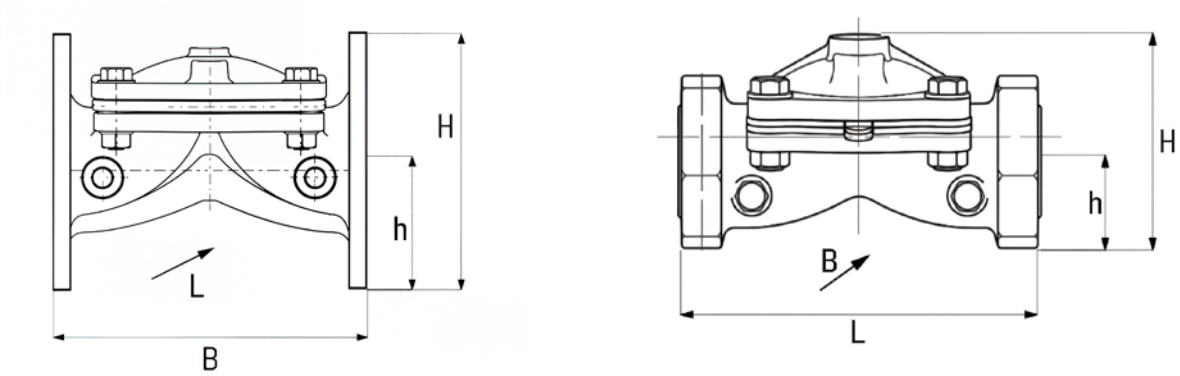

THREAD MEASUREMENTS						
DN		**L**	**H**	**B**	**H**	**KG**
1	25	156	70	94	21	1,5
1,5	40	159	80	96	29	2
2	50	190	100	125	38	3,5
2,5	65	216	110	125	46	5
3D	80-65-80	244	127	138	50	5,5

FLANGE MEASUREMENTS						
DN		**L**	**H**	**B**	**H**	**KG**
2	50	190	159	165	76	7,9
2,5	65	216	173	185	80	9,3
3	80	283	200	200	100	17,5
4D	100-80-100	283	222	222	111	20
4	100	305	220	230	99	26
5D	125-100-125	305	243	250	120	30
6	150	406	295	300	142	46
6D	150-100-150	206	315	300	150	28,3
8	200	470	383	354	160	67,5
10	250	635	430	464	197	111
12	300	749	474	480	234	151