HYDRAULIC VALVE S-100

The Gal valve is a hydraulic valve with a diaphragm, which opens and closes using the pressure of the water in the network. Its constructive simplicity, which practically eliminates maintenance, classic diaphragm and spring system with wide use in the irrigation market.









MATERIAL CHARACTERISTICS

Body: made of cast iron **GGG50.**

Natural rubber diaphragm with interior textile reinforcement mesh, which provides high mechanical resistance and durability.

Internal and stainless steel spring SST302, nickel-plated steel screws.

OPERATING CHARACTERISTICS

Rated pressure: PN16

Temperature: up to 60-80 °C

Connections: 1" to 2-1/2" thread, 3" to 8" Flange PN16.

MODELS

CODE	SIZE	CONNECTION	PN	RRP (€)
11020013	25	1" THREAD	16	**83**
11020014	40	1-1/2" THREAD	16	**86**
11020015	50	2" THREAD	16	**92**
11020016	65	2-1/2 THREAD	16	**137**
11020017	80	3" FLANGE	16	**253**
11020018	100	4" FLANGE	16	**300**
11036037	125	5" FLANGE	16	**541**
11020019	150	6" FLANGE	16	**841**
11020020	200	8"- 6"- 8" FLANGE	16	**1539**
11020047	50	2" THREAD	10	**77**
11020045	80	3" FLANGE	10	**230**
11020046	100	4" FLANGE	10	**289**
11020048	150	6" FLANGE	10	769

PRESSURE LOSS

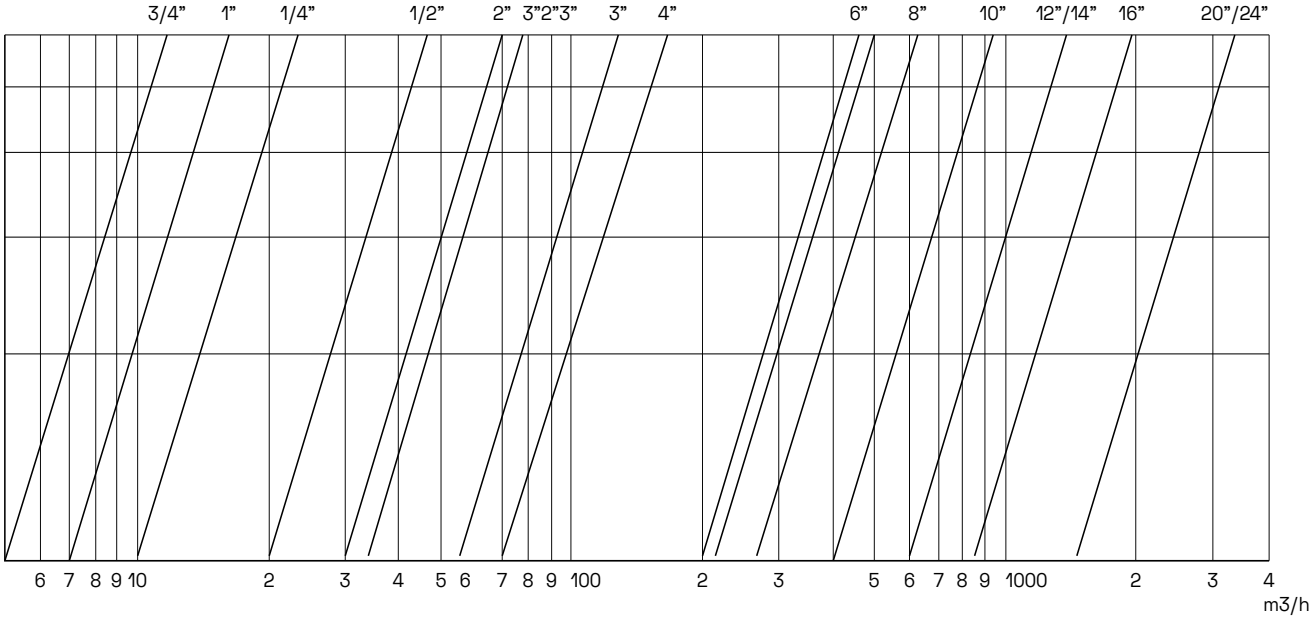

DIMENSIONS

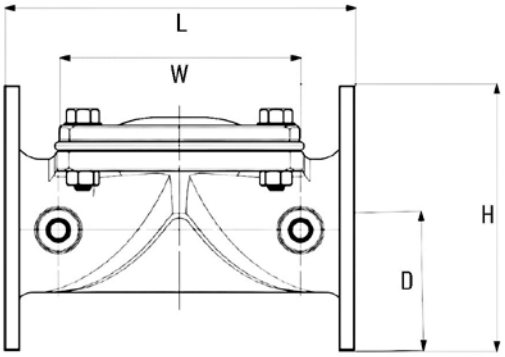

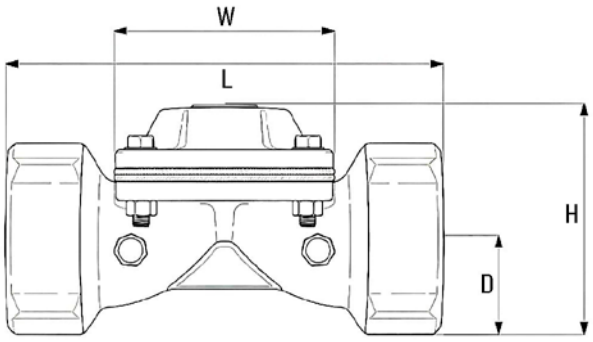

DN	L	H	D	W	KG
25 R	120	52	24	68	1
40 R	170	93	33	93	2,2
50 R	188	115	42	112	3,2
65 R	219	118	46	112	3,6
80 R	225	126	54	112	4,5
80 BR	285	200	105	200	17
100 BR	305	230	110	230	22
125 BR	305	230	110	230	22
150 BR	390	314	145	300	46
200 BR	460	400	170	365	80