SOLENOID VALVE E-200

The E-200 Solenoid Valve is a hydraulic and electric control valve, designed for plastic irrigation systems. These valves are characterized by their diaphragm-assisted hydraulic operation. They can be flexibly installed in both horizontal and vertical positions, and are offered in diameters from 1" to 2".







MATERIAL CHARACTERISTICS

Body and Lid: Reinforced Nylon (High resistance plastic with fiberglass).

Diaphragm and Gaskets: NBR (Nitrile Rubber, also known as Buna-N).

Metal parts (Spring and lid screws): Stainless steel.

OPERATING CHARACTERISTICS

Connections: Available from 1" to 2".

Nominal Pressure: 10 bar

Working Pressures: 0.7 to 10 bar

MODELS

CODE	SIZE	CONNECTION	VOLTAGE	UNITS/BOX	RRP (€)
11034065	25	1" THREAD	S/Solenoid	12	**19**
11034066	40	1-1/2" THREAD	S/Solenoid	6	**52**
11034067	50	2" THREAD	S/Solenoid	6	**54**

ACCESSORIES



LATCh SOLENOID ADAPTER		
CODE	CONNECTION	RRP (€)
11021021	ADAPTER 6,8	



Galcon solenoid 2 vias		
CODE	MODEL	RRP (€)
11021023	3 LATCH THREADS 39,6	



SOLENOID		
CODE	CONNECTION	RRP (€)
	9V LATCH 2HILOS	24

PRESSURE LOSS

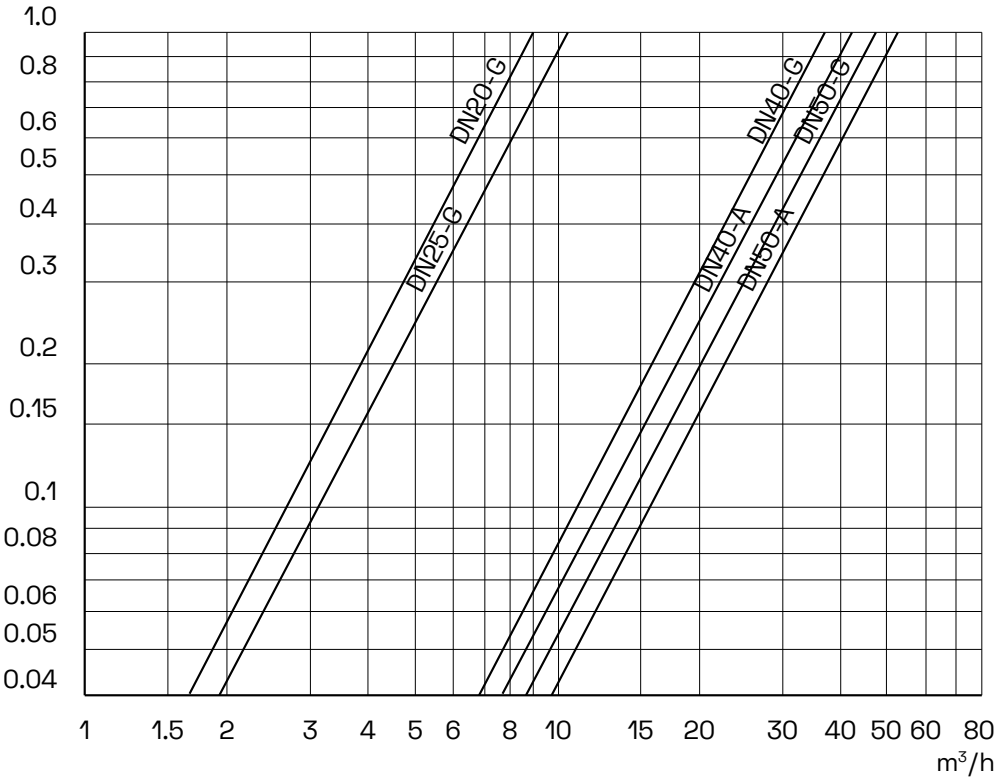

DIMENSIONS

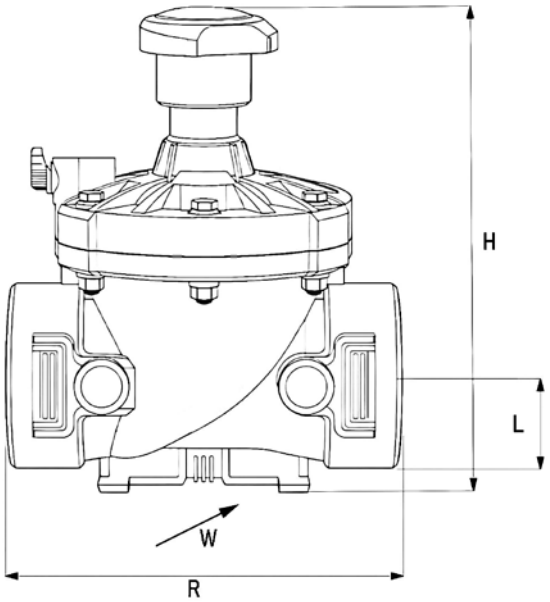

DN	L	H	R	W	KG
DN25	110	115	22	78	0,33
DN40	160	180	35	125	1,0
DN50	170	190	38	125	1,1