SOLENOID 3 WAYS SR-100

The SR-100 solenoid is a 3 single-way solenoid, designed to precisely pilot hydraulic valves, especially in industrial and irrigation applications that require robustness.







MATERIAL CHARACTERISTICS

Body/Base: Brass

Internal metal parts: Stainless steel 304

Gaskets/Seals: NBR (standard)

OPERATING CHARACTERISTICS

Versions: AC, DC and latch

AC working voltage: 24V or **220V**

DC working voltage: 12V or **24V**

Working pressure: 0 to 10 bar, depends on model

Maximum fluid temperature: 80°C

MODELS

CODE	MODEL	VOLTAGE	MAX PRESSURE	HOLE MM	RRP (€)
11021056	NC	24VAC - 6W	10	2.4	**48**
11021057	NO	24VAC - 6W	10	2.4	**48**
11021050	NC	24VAC - 6W	10	2	**48**
11021051	NO	24VAC - 6W	10	2	**48**
11021052	NC	24VAC - 4W	10	1.6	**48**
11021053	NO	24VAC - 4W	10	1.6	**48**
11021054	NC	12VDC - 3W	10	1.6	**48**
11021055	NO	12VDC - 3W	10	1.6	**48**
11021058	NC	24VDC - 5W	10	2	**48**

ACCESSORIES



TEFEN ACCESSORY

SEE PAGE



metal accessory

SEE PAGE



solenoid support

CODE	MODEL	RRP (€)
14112001	SUPPORT	**40**

DIMENSIONS

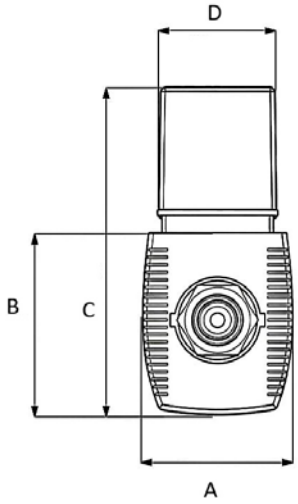

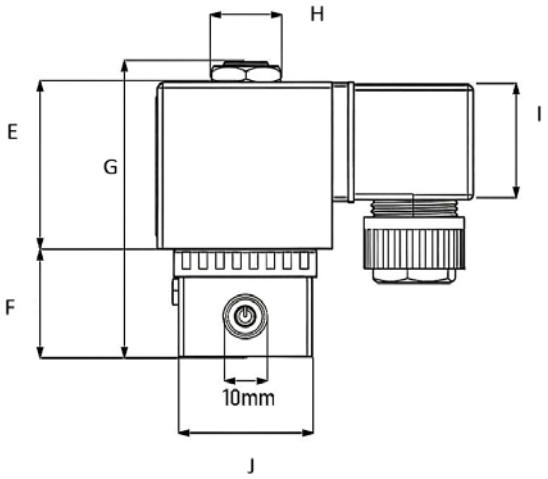

A	B	C	D	E	F	G	H	I	J
33	45	75	27	40	25	65	16	27	31

INFORMATION

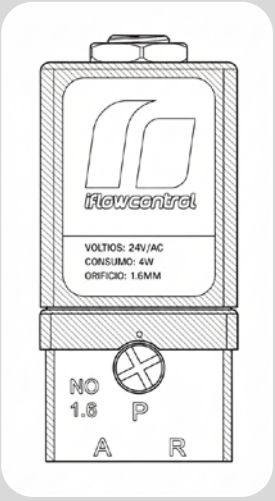

Connection NO (Normally Open)

The goal is for the main valve to remain closed if there is no power

Port P (Pressure): Receives water pressure from the network. Port R (Drain): Connects to the atmosphere. Port A (Chamber): Connects to the chamber of the valve to be controlled

NC (Normally Closed) Connection

The goal is for the main valve to remain open if there is no power

Port R (Pressure): Receives the water pressure from the network. Port P (Drain): Connects to the atmosphere. Port A (Chamber): Connects to the chamber of the valve to be controlled