# SOLENOID 3 WAYS SR-100 LD

SR-100 LD long distance solenoid designed to control hydraulic valves in irrigation systems. Made with a metal base, it uses the traditional coil and piston latch system combined with a 24AC/DC to latch converter. It allows you to cover distances of several km with low consumption with a standard 1.5mm cable.







## MATERIAL CHARACTERISTICS

**Body:** Brass and ABS electronics

**Hydraulic connections:** 1/8" **BSP.**

**Electrical connections:** 2 cables (1,2 m).

**Internal metal parts:** Stainless steel

## OPERATING CHARACTERISTICS

**Voltage:** 24 VAC/DC depending on model.

**Consumption at startup:** 70 mA.

**Hold consumption:** 10 mA.

**Command to activation delay time:** 1–3 seconds.

**Maximum working temperature:** 60°C.

**Maximum working pressure:** 10 bar.

## MODELS

| CODE | MODEL | VOLTAGE | MAX PRESSURE | HOLE MM | RRP (€) |
|---|---|---|---|---|---|
| **11021061** | NC/NO | 24VAC/DC CONVERTER | | | **40** |
| **11021060** | NO/NC | 9-12V LATCH SOLENOID | 14 | 1.6 | **48** |

## ACCESSORIES

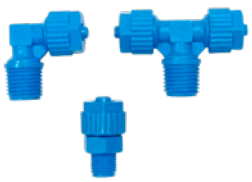

**TEFEN ACCESSORY**

**SEE PAGE**



**metal accessory**

**SEE PAGE**



**solenoid support**

| CODE | MODEL | RRP (€) |
|---|---|---|
| **14112001** | SUPPORT | **40** |

## DIMENSIONS

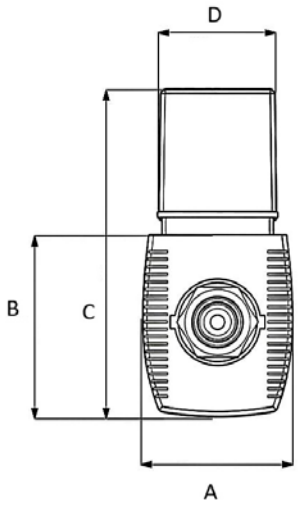


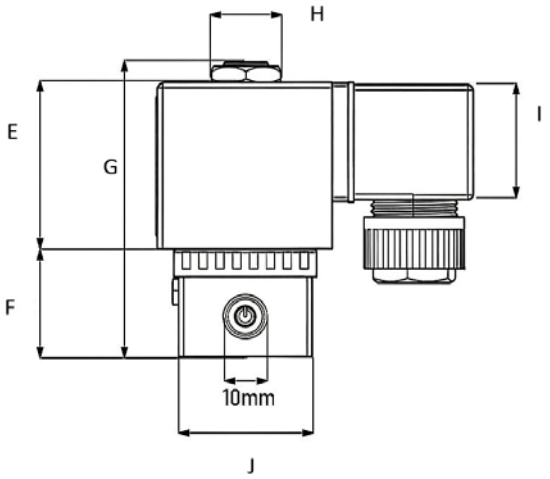


| A | B | C | D | E | F | G | H | I | J |
|---|---|---|---|---|---|---|---|---|---|
| 33 | 45 | 75 | 27 | 40 | 25 | 65 | 16 | 27 | 31 |

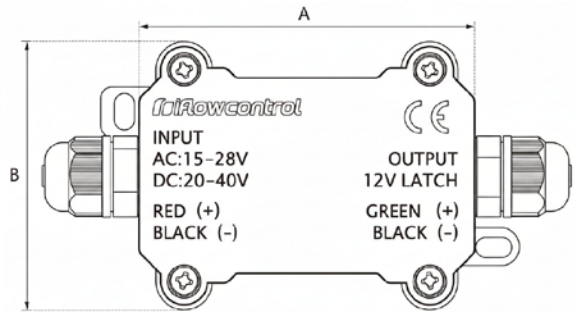


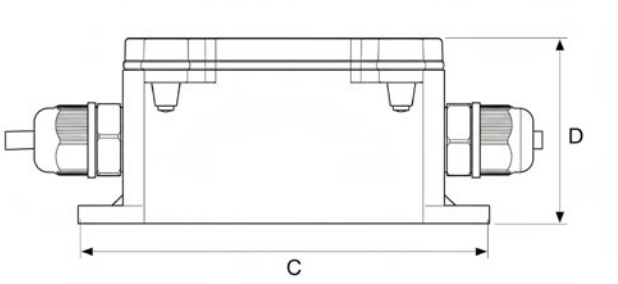


## OPERATING DISTANCE

| SCOPE OF MODEL 24 AC/DC | |
|---|---|
| CABLE CROSS SECTION MM | MAXIMUM DISTANCE (M) |
| 0,2 | 600 |
| 0,5 | 1250 |
| 0,8 | 2000 |
| 1 | 2500 |
| 1,3 | 3500 |