SOLENOID 3 WAYS SR-200

SR-200 solenoid designed to control hydraulic valves in irrigation systems. Made of plastic, it incorporates a manual actuator and a protective cap to protect the control from humidity. Its low consumption characteristics make it ideal for installation over long distances, guaranteeing reliable and long-lasting operation. It is located in 24V AC/DC and 12V latch depending on the model.







MATERIAL CHARACTERISTICS

Body: PP and polyamide

Control diaphragm: EPDM

Hydraulic connections: 1/8" BSP

Electrical connections: 2 cables (1,2 m)

Bracket Material: Stainless Steel 316

OPERATING CHARACTERISTICS

Voltage: 12–24 VAC/DC or LATCH depending on model

Consumption at startup: 70 mA

Hold consumption: 10 mA

Activation delay time: 1–3 seconds

Maximum working temperature: 60°C

Maximum working pressure: 10 bar

MODELS

CODE	MODEL	VOLTAGE	HILOS	MAX PRESSURE	HOLE MM	RRP (€)
11021039	NO/NC	9-24V LATCH	2	10	2	**48**
11021032	NO/NC	6-9V LATCH	2	10	2	**48**
11021038	NO/NC	24V AC/DC	2	10	2	**52**

ACCESSORIES



TEFEN ACCESSORY

SEE PAGE



solenoid valve support		
CODE	MODEL	RRP (€)
12040052	SUPPORT	**5**



solenoid support		
CODE	MODEL	RRP (€)
14112001	SUPPORT	**40**

DIMENSIONS

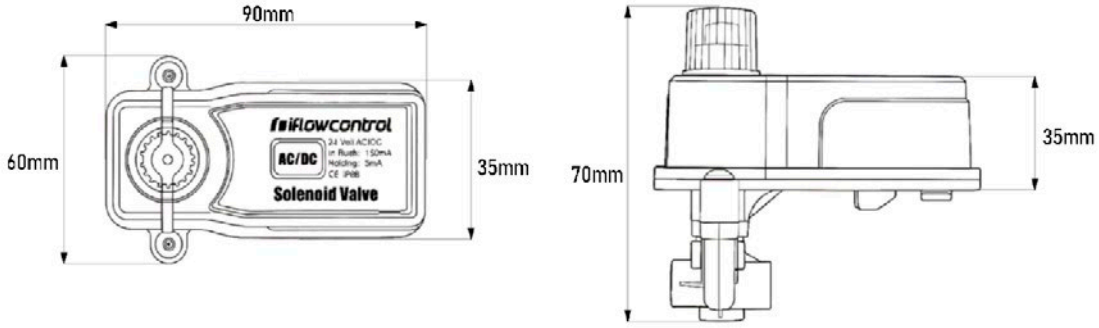

OPERATING DISTANCE

SCOPE OF MODEL 24 AC/DC	
CABLE CROSS SECTION MM	MAXIMUM DISTANCE (M)
0,2	600
0,5	1250
0,8	2000
1	2500
1,3	3500
1,5	5000

LATCH MODEL SCOPE (PUSLO 13,5V 80MS)	
CABLE CROSS SECTION MM	MAXIMUM DISTANCE (M)
0,5	150
1	240
1,5	380

INFORMATION

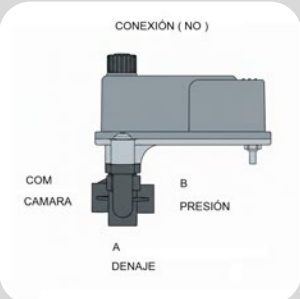

Connection NO (Normally Open)

The goal is for the main valve to remain closed if there is no power

- **Port B (Pressure):**Receives water pressure from the network.
- **Port A (Drain):**Connects to the atmosphere.
- **COM Port (Camera):**Connects to the chamber of the valve to be controlled

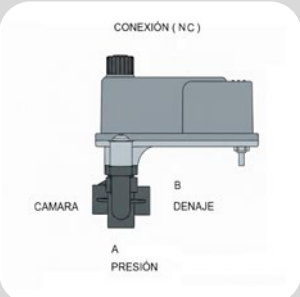

NC (Normally Closed) Connection

The goal is for the main valve to remain open if there is no power

- **Port A (Pressure):**Receives water pressure from the network.
- **Port B (Drain):**Connects to the atmosphere.
- **COM Port (Chamber):**Connects to the valve chamber that is