GALIT HYDRAULIC RELAY

GALIT hydraulic relay designed for remote control of hydraulic valves: receives a hydraulic signal and activates the main valve. Ideal for irrigation systems where the valves are far from the head, with unevenness or when a quick and reliable reaction of the hydraulic system is required. It also allows manual control using a 3 position lever.







MATERIAL CHARACTERISTICS

Body and lid: glass fiber reinforced nylon

Gaskets: NBR

Internal springs: stainless steel

OPERATING CHARACTERISTICS

Type: 3-way hydraulic relay, configurable as normally open NO or normally closed (N.C.)

Working pressure range: 0,5 to 10 bar.

Hydraulic connections: 1/8" BSP female thread

Hydraulic signal internal hole/pitch: 5,8 mm

MODELS

CODE	MODEL	RRP (€)
11022047	GALIT HYDRAULIC RELAY	**58**
169200010	YELLOW SPRING 5-10 M	**5,25**
169200020	GREEN SPRING 10-15M	**5,25**
169200030	WHITE SPRING 15-20M	**5**
169200040	RED SPRING 20-25	**5**

ACCESSORIES

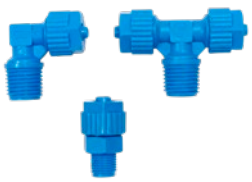

TEFEN ACCESSORY

SEE PAGE



metal accessory

SEE PAGE



SOLENOID ADAPTER 3 WAYS

CODE	MODEL	RRP (€)
11022050	ADAPTA-DOR	**5**

DIMENSIONS

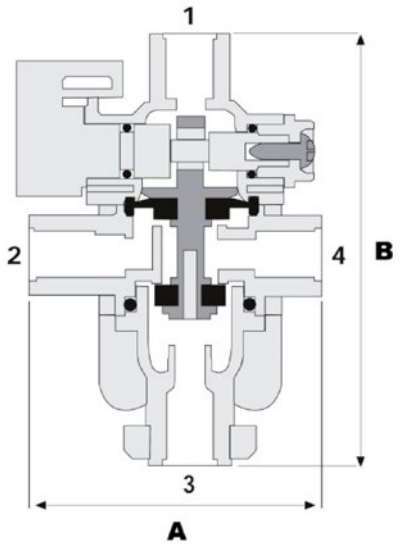

A	B	KG
45	90	0.2

INFORMATION

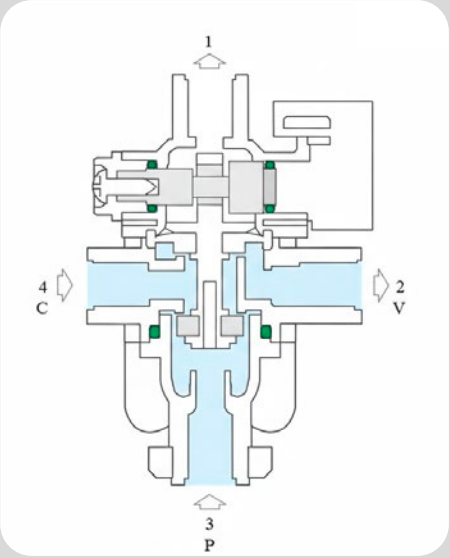

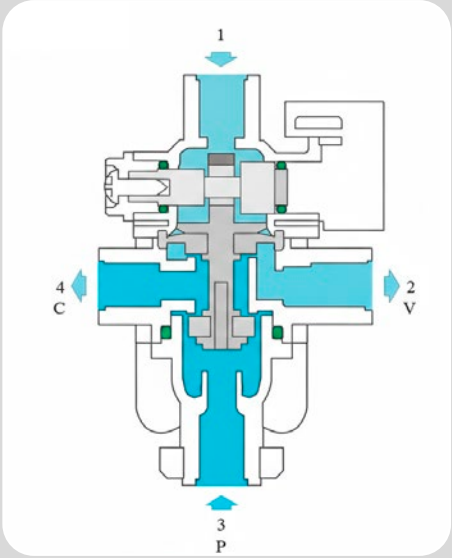

Port 1 (Top): Input for the solenoid pressure signal.
Port 2 (Side): Connection to the main valve chamber (the one you want to open or close). Port 3 (Lower): Connection to main line pressure (P).

Port 4 (Side): Drain or vent connection (V).