REDUCER / SUPPORTER PILOT S-100

The S-100 plastic pressure reducer-sustainer pilot 3 ways, designed to control hydraulic valves from 1" to 8", and maximum inlet pressures 10 bar with regulation from 0.3 bar to 6.8 bar, thanks to its different springs to adjust to the precision and sensitivity of each installation.







MATERIAL CHARACTERISTICS

Lid and base: made of polyamide.

Gaskets: EPDM

Spring and screw: Stainless steel

Connections: 1/8"

OPERATING CHARACTERISTICS

Maximum pressure: 10 bar and can be adjusted in ranges of 0.3–3 bar or 0.8–6.8 bar.

MODELS

CODE	FUNCTION	REGULATION	RRP (€)
11022036	REDUCER - HOLDER	0.8 - 6.8 BAR	**58**
11022053	REDUCER - HOLDER	0.5 - 3 BAR	**58**

ACCESSORIES



TEFEN ACCESSORY

SEE PAGE



LONG DISTANCE SOLENOID

SEE PAGE



metal base solenoid

SEE PAGE

DIMENSIONS

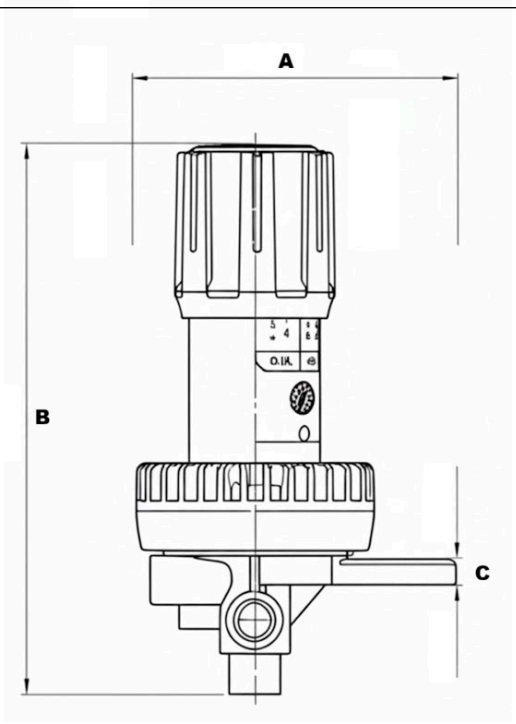

A	B	C	KG
140	160	10	0.3

INFORMATION

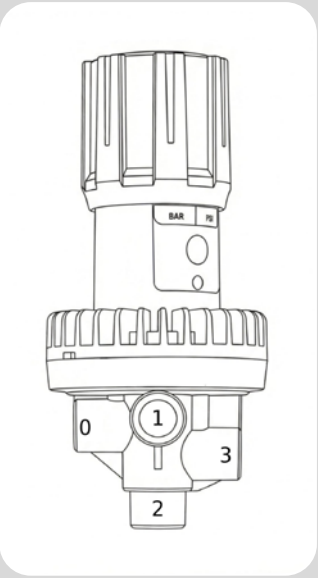

Pressure Reducing Function

Port 1 (Outlet): Connects to the pressure downstream of the main valve. Port 2 (Drain): It is left free to the atmosphere.

Port 3 (Auto): Connects to the control chamber (cover) of the main valve. Port 0 (Inlet): Connects to upstream pressure (main valve inlet

Pressure Sustaining Function

Port 1 (Inlet): Connects to the upstream pressure (main valve inlet Port 2 (Inlet): Also connects to the upstream pressure (or bypassed with port 1). Port 3 (Auto): Connects to the control chamber (cover) of the main valve. Port 0 (Drain): Released to the atmosphere

REDUCER	HOLDER
1 - Output	1 - Input
2 - Drain	2 - Input
3 - Auto	3 - Auto
0 - Input	0 - Drain