GLYCERINE MANOMETER

Glycerin manometer designed for liquid pressure. Its interior is partially filled with glycerin, upper lever for specific venting and closure in horizontal positions, offering a more stable and accurate reading as it protects the internal mechanism from wear.







MATERIAL CHARACTERISTICS

Connection thread: Brass

Metal body: Stainless steel

Internal filling: Glycerin

Internal mechanism: Metal alloy

OPERATING CHARACTERISTICS

Available pressure ranges: from 2.5 to 16 bar

Inlet port: 3mm

Working temperature: -10°C to + 60°C

Accuracy: +1,6 % of range

Maximum working pressure: It is recommended not to exceed 75 % of the maximum range.

MODELS

CODE	CONNECTION	BAR SCALE	UNITS/BOX	RRP (€)
11028075	1/4"	0 - 2.5	100	9,45
11028067	1/4"	0 - 4	100	8,5
11028068	1/4"	0 - 6	100	8,5
11028069	1/4"	0 - 10	100	8,5
11028076	1/4"	0 - 16	100	8,5

ACCESSORIES

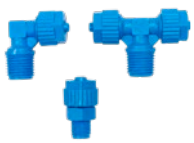

TEFEN ACCESSORY

SEE PAGE



metal accessory

SEE PAGE



POSITIONING MANOMETER

CODE	MODEL	RRP (€)
11028077	0 - 10 BAR	**30**

DIMENSIONS

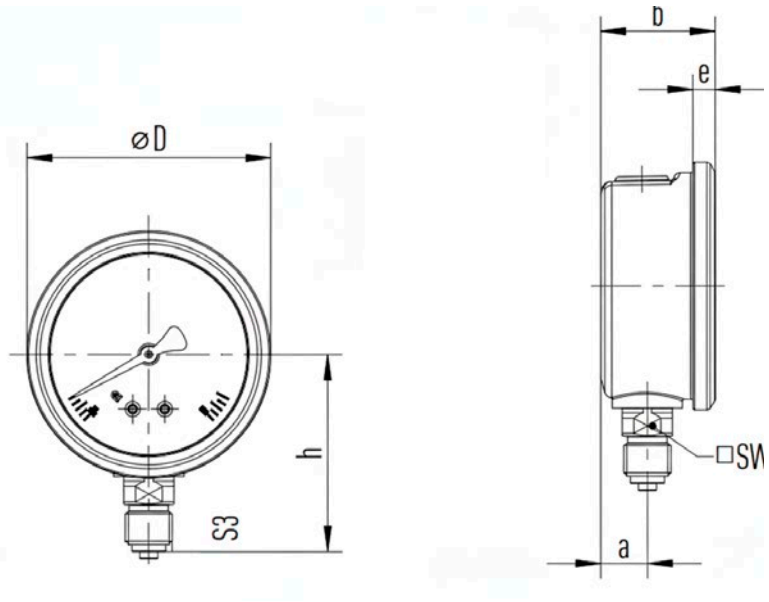

G	H [MM]	S3 [MM]	A [MM]	B [MM]	E [MM]	D [MM]	SW [MM]
G 1/4 B	54	13	13	32	6,5	68	14

INFORMATION



When screwing in the device, you should not apply force to the casing. Always use the correct tools and only tighten on the flat parts designed for it.



After assembly, you must turn the yellow lever, or take it from CLOSE to OPEN, if the pressure gauge is mounted in a horizontal position, open and close it several times during use to extract the air the first time.