MAXIMUM AND MINIMUM PRESSURE SWITCH

The maximum and minimum pressure switch is designed to measure process pressure and simultaneously activate or interrupt electrical circuits through adjustable contacts according to the position of the 2 pointer positions.









MATERIAL CHARACTERISTICS

Housing: Stainless steel

Dial: Aluminum

Window: Polycarbonate

OPERATING CHARACTERISTICS

Measurement ranges: From 0 -10bar

Static: Up to full scale value.

Housing protection: IP54

Voltage: 24v – 220v

Closing current: Up to 1.0 A.

Breakdown current: Up to 1.0 A.

Continuous current: Maximum 0.6 A.

Maximum contact load: 30W/50VA.

Connection: 1/2”

MODELS

CODE	CONNECTION	RANGO	RRP (€)
12040025	1/2”	0-10 BAR	**299**

ACCESSORIES

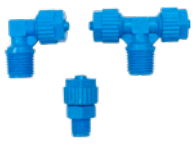

TEFEN ACCESSORY

SEE PAGE



metal accessory

SEE PAGE



POSITIONING MANOMETER

CODE	MODEL	RRP (€)
11028077	0 - 10 BAR	**30**
11028078	0 - 16 BAR	**30**

DIMENSIONS

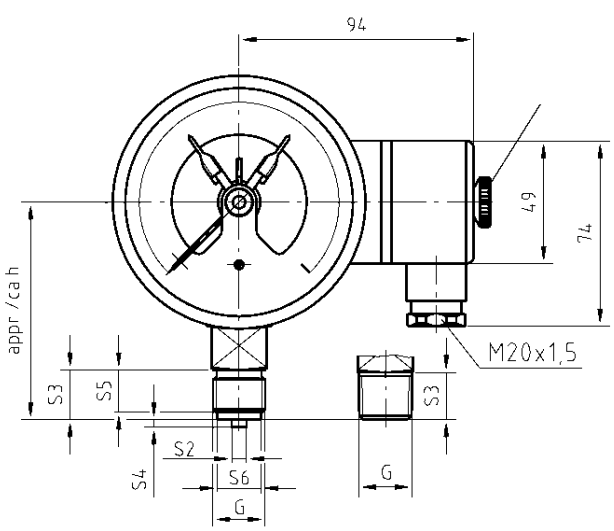

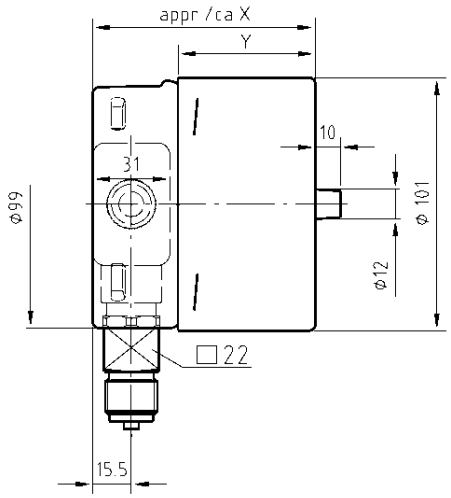

TYPE OF CONTACTO	DIMENSIONS IN MM X	DIMENSIONS IN MM AND	CONEXIÓN A PROCESS	DIMENSIONS IN MM H ± 1	S2	S3	S4	S5	S6
Double contact	113	80	G 1/2 B	87	6	20	3	17	17.5

INFORMATION

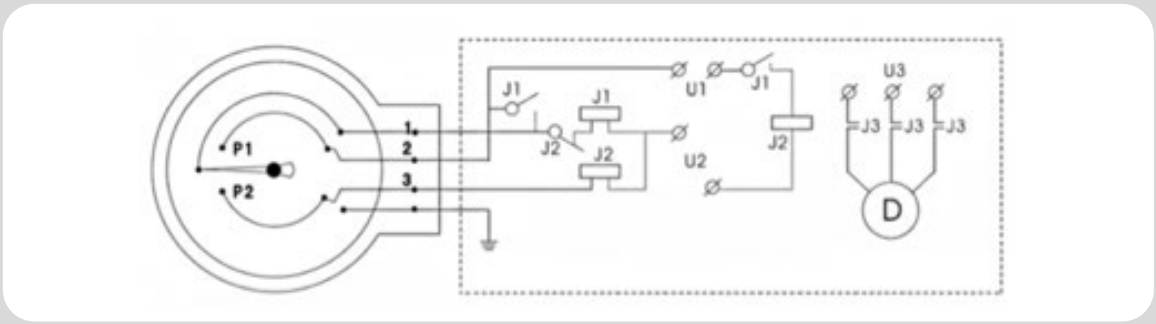

Lower Legend (Numbering)

1. Main line (Red)
2. Upper limit (Yellow)
3. Lower Limit (Green)
4. Ground / Ground (Black)

Diagram Labels

P1 / P2: Represent the pressure set points (contacts).

J1 / J2 / J3: Normally refer to relays or connectors within the control circuit.

U1 / U2 / U3: Voltage or phase terminals.

D: Represents the output device or load (such as a motor or pump).