FLOW SWITCH

The flow switch is designed to detect the flow of liquids (water, oils, chemicals) in pipes with diameters from 1" to 8". Supplied with set of 4 interchangeable reeds to adapt to different diameters.





MATERIAL CHARACTERISTICS

Base: ABS

Lid: Transparent polycarbonate

Reed (flow sensor): AISI stainless steel 316L

Fixing thread: Brass

OPERATING CHARACTERISTICS

Maximum service pressure: +11 bar.

Maximum contact voltage: 250 V AC.

Breaking capacity: 15 A / 24- 250 V AC (resistive)..

Flow rate for activation:

Increasing flow: 1,0 m/s to 172,5 m/s.

Decreasing flow: 0,6 m/s to 165,7 m/s.

MODELS

CODE	MODEL	RRP (€)
10011045	SF 1"	115

ACCESSORIES

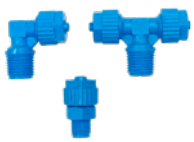

TEFEN ACCESSORY

SEE PAGE



metal accessory

SEE PAGE



POSITIONING MANOMETER

CODE	MODEL	RRP (€)
11028077	0 - 10 BAR	**30**
11028078	0 - 16 BAR	**30**

DIMENSIONS

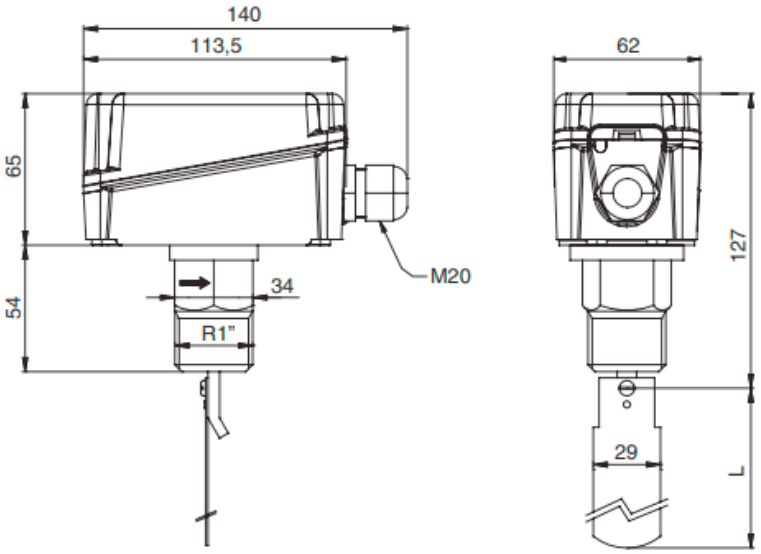

INFORMATION

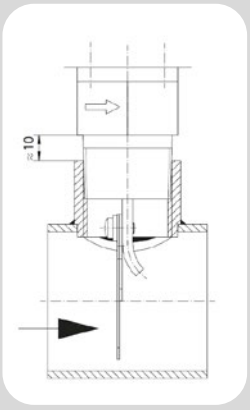

Calibration: It comes from the factory at the minimum value.

Adjustment: Turn the screw clockwise (clockwise) to increase the peel value.

Safety: The value must be greater than or equal to the minimum protection flow of the plant.

Installation: Includes 4 cams that must be cut to pipe size. Does not include “T” fitting (available only upon request)

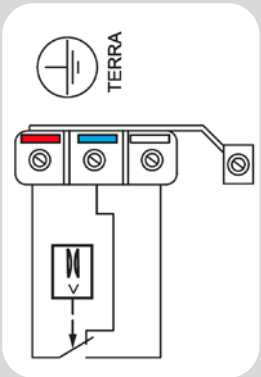

Electrical connection: Connect the red and white contacts. These will open if the flow value decreases below the programmed value. The red and blue contacts close simultaneously and can be used as a signal