IRRIGATION PROGRAMMER ICD-150

The TISU ICD-150 programmer is an effective solution, due to its easy programming, the simultaneous opening of all its 14 outputs either in Latch (9-12v), 24vAc or 12vDc, makes it a unique programmer on the market.







MATERIAL CHARACTERISTICS

Housing: ABS Plastic

Control Panel: Liquid Crystal Display (LCD) and integrated keyboard

Internal components: Electronic sensor internal circuits

OPERATING CHARACTERISTICS

Independent station programming.

Simultaneous opening of all stations.

10 start times per station

10 irrigation hours per station

Filter cleaning by pressure switch and irrigation time

Master valve

Technical menu for settings, pulse width, capacitor charging time, etc.

MODELS

CODE	OUTPUT	CAJA	VOLTAGE	UNITS/BOX	RRP (€)
11023063	6	PARED	9V LATCH	1	**430**
11023065	14	PARED	9V LATCH	1	**471**
11023066	14	PARED	24VAC	1	**471**
11023067	14	PARED	12VDC	1	**471**
11023068	14	PANEL	24VAC	1	**441**

ACCESSORIES



SOLENOID VALVE		
CODE	CONNECTION	RRP (€)
11034065	1" THREAD	**19**
11034066	**1-1/2" THREAD**	**52**
11034067	2" THREAD	**54**



SOLENOID		
CODE	CONNECTION	RRP (€)
	SOLENOIDE 2 VIAS 9V LATCH 2HILOS	**24**



PROCELL 9V BATTERIES		
CODE	MODEL	RRP (€)
11033013	9V ILR	**4.2**

DIMENSIONS

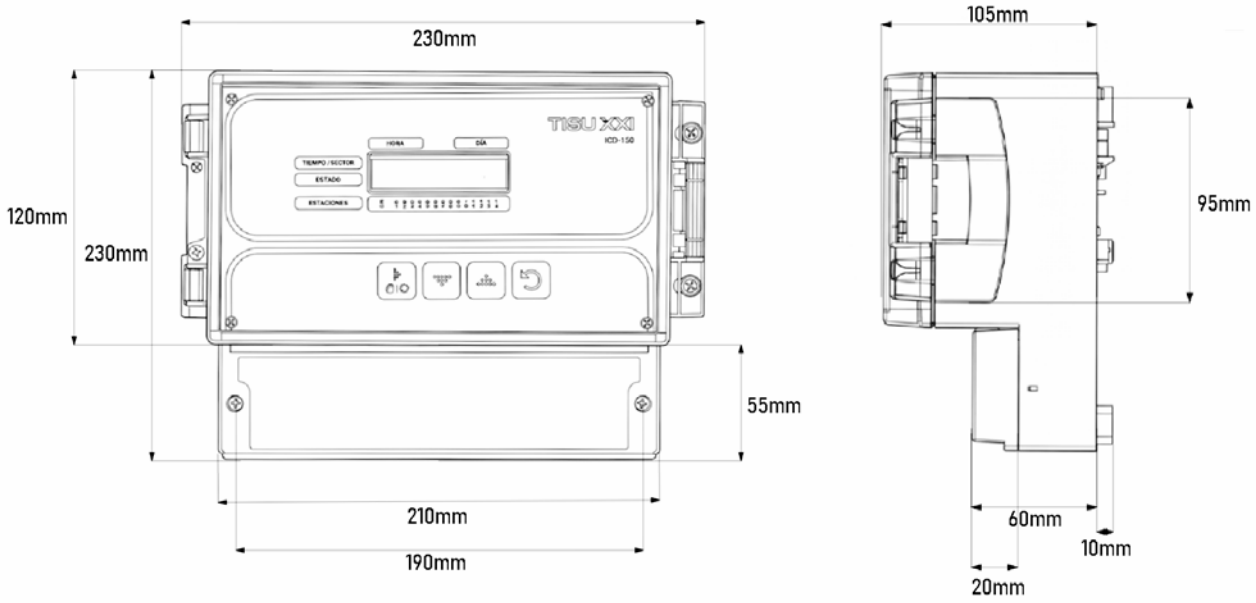
230mm
120mm
230mm
55mm
210mm
190mm
105mm
95mm
60mm
10mm
20mm