MANUAL FILTERS
MF-100

The MF-100 filter is a completely plastic filter prepared for irrigation systems. As it is completely made of plastic and does not contain metal parts, corrosion is zero. Prepared to withstand pressures of up to 8 Bar. The filter element can be either disc or mesh. The standard model would be a leak to 120mesh.







MATERIAL CHARACTERISTICS

The Body and Lid: are made of Polypropylene.

Discs: in high-density plastic (PP).

Seals and Gaskets: in EPDM.

OPERATING CHARACTERISTICS

Maximum Working Pressure: Generally, 10 bar (standard on most series), although some very compact models may be limited to 8 bar.

Male thread connections: connections from 3/4" to 2".

This filter is available in 120mesh and discs.

MODELS

SIZE	CONNECTION	TYPE OF FILTER	CODE	UDS	RRP (€)	CODE	UDS. CAJA SMALL	RRP (€)	CODE	UDS. CAJA BIG	RRP (€)
20	3/4"	Malla	**12042062**	1	**11,8**	**12043025**	10	**10,5**	**12042050**	60	**5**
25	1"	Malla	**12042063**	1	**11,8**	**12043026**	10	**10,5**	**12042051**	60	**5**
30	1-1/4"	Malla	**12042064**	1	**17,9**	**12043027**	4	**16**	**12042052**	25	**8,5**
40	1-1/2"	Malla	**12042065**	1	**17,9**	**12043030**	4	**16**	**12042053**	25	**8,5**
40	1-1/2" SUP	Malla	**12042066**	1	**27,4**	**12043019**	2	**24,5**	**12042054**	13	**16**
50	2"	Malla	**12042067**	1	**27,4**	**12043029**	2	**24,5**	**12042055**	13	**16**
20	3/4"	Discs	**12042068**	1	**13,4**	**12043024**	10	**12**	**12042056**	60	**6,5**
25	1"	Discs	**12042069**	1	**13,4**	**12043020**	10	**12**	**12042057**	60	**6,5**
30	1-1/4"	Discs	**12042070**	1	**23,5**	**12043021**	4	**21**	**12042058**	25	**13,5**
40	1-1/2"	Discs	**12042071**	1	**23,5**	**12043022**	4	**21**	**12042059**	25	**13,5**
40	1-1/2" SUP	Discs	**12042072**	1	**32,5**	**12042046**	2	**29**	**12042060**	13	**21**
50	2"	Discs	**12042073**	1	**32,5**	**12043023**	2	**29**	**12042061**	13	**21**

PRESSURE LOSS

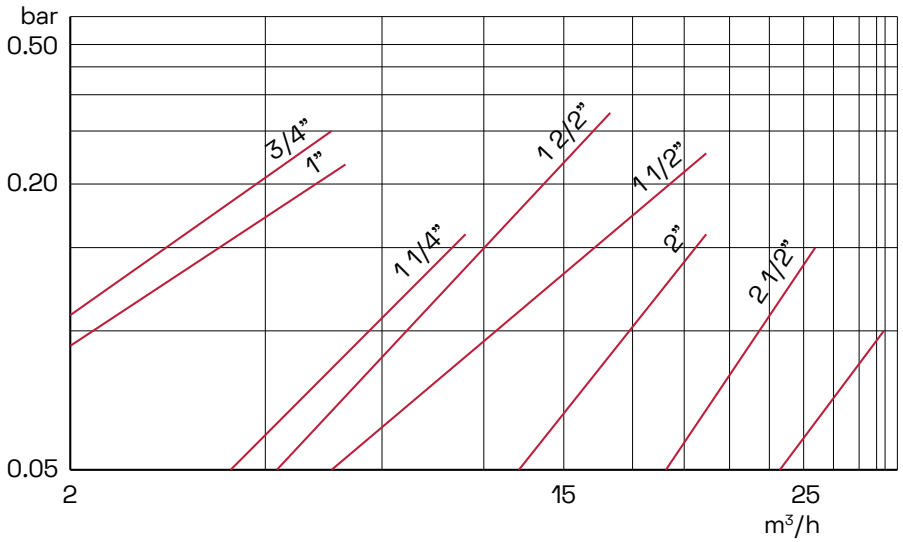

DIMENSIONS

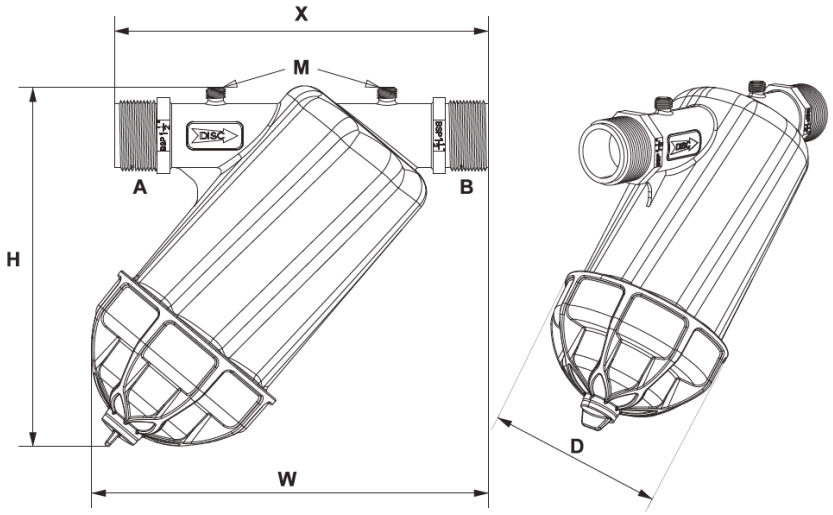

MODEL	H (MM)	W (MM)	D (MM)
3/4"	173	186	83
1"	173	186	83
1-1/4"	230	250	120
1-1/2"	230	250	120
1-1/2" Super	260	290	140
2"	260	290	140