SAND FILTER SM-100

The SM-100 sand filter is designed for the filtration of the most complicated waters. Use a layer of silica sand. Its main feature is the internal drainage and distribution system by collecting arms, which ensures uniform filtration and efficient backwashing.







MATERIAL CHARACTERISTICS

Body and Tanks: Carbon steel, with epoxy paint coating

Top Cover: Steel, PEDM gaskets

Collector arms: Technical plastic OPERATING

CHARACTERISTICS

Cleaning Type: Automatic hydraulic backwash (activated by pressure differential or time)

Maximum Working Pressure: 8 bar (0,6 MPa)

Minimum Working Pressure: 2,5 bar

Standard Working Flow Rate: 30 to 250 m³/h.

MODELS

CODE	SIZE	CONNECTION	AREA FILTRATION (CM²)	M3/H	KG	ARENA KG	RRP (€)
12044001	1-1/2"	THREAD	1.962	15	45	175	865
12044002	2"	THREAD	4.415	30	76	350	1045
12044003	3"	FLANGE	7.084	50	130	600	1722
12044004	4"	FLANGE	11.304	70	180	1.100	2683
12044005	6"	FLANGE	15.386	115	284	1.500	3900

ACCESSORIES



SLOTTED CLAMP		
CODE	MODEL	RRP (€)
40001307	2"	12
12040041	3"	15



BACKWASH VALVE		
CODE	FLUJO	RRP (€)
40001362	STRAIGHT 2"	234
40001364	STRAIGHT 3"	444



butterfly valve
SEE PAGE

PRESSURE LOSS

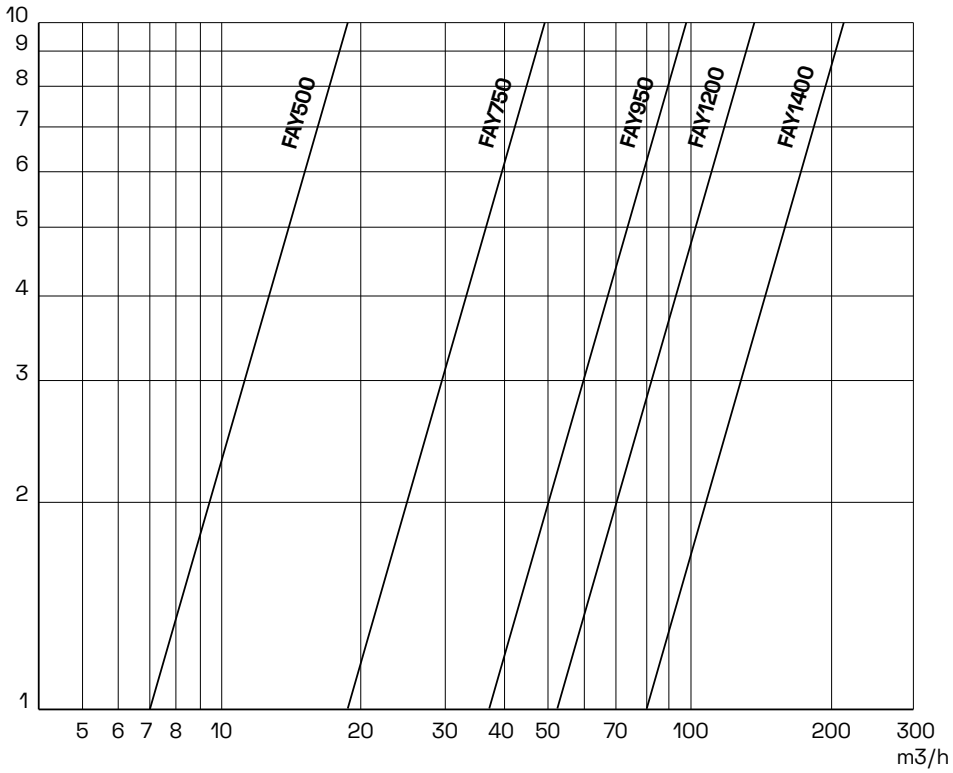

DIMENSIONS

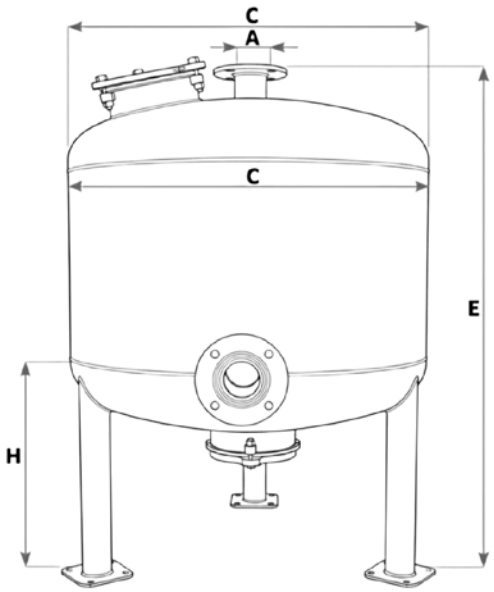

A	C	E	H
1 ½'' THREAD	500	970	440
2'' THREAD	750	1195	515
3'' FLANGE	950	1335	545
4'' FLANGE	1.200	1365	525
6'' FLANGE	1.400	1.620	600