PLASTIC HYDROCYCLONE HC-200

The plastic hydrocyclone is designed for the separation of solid particles from water using centrifugal force. Its internal structure generates a spiral flow that propels the particles towards the walls of the cone, directing them to the lower collector, while clean water exits through the upper part.







MATERIAL CHARACTERISTICS

Body and Cone: PP + Fiberglass

Other Metal Parts: Union clamp GGG40

OPERATING CHARACTERISTICS

Separation Type: Centrifugal (without filter elements)

Maximum Working Pressure: 8 bar

Recommended Operating Pressure: 5 bar

Typical Head Loss: 0.2 , 0.5 bar

Standard Working Flow: From 5 m³/h to 50 m³/h (depending on model)

Maintenance: Manual cleaning using lower purge valve

MODELS

CODE	SIZE	CONNECTION	M3/H	RRP (€)
12045009	2" PP	FLANGE	15 - 28	436
12045011	3" PP	FLANGE	45 - 60	667
12045012	4" PP	FLANGE	60 - 75	**942**

ACCESSORIES



butterfly valve

SEE PAGE



ONIX TRIPLE EFFECT AIR VALVES

SEE PAGE

Separation efficiency

2" CENTRIFUGAL SEPARATION EFFICIENCY DIAGRAM

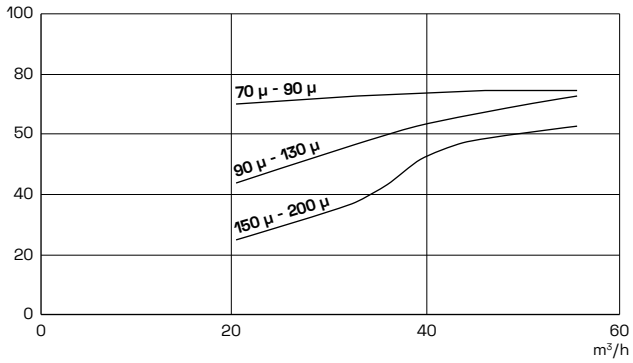

3" CENTRIFUGAL SEPARATION EFFICIENCY DIAGRAM

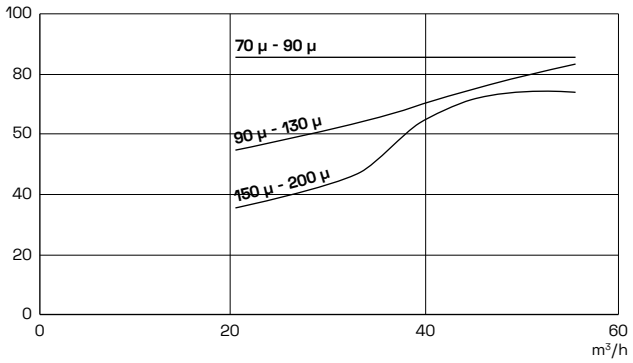

4" CENTRIFUGAL SEPARATION EFFICIENCY DIAGRAM

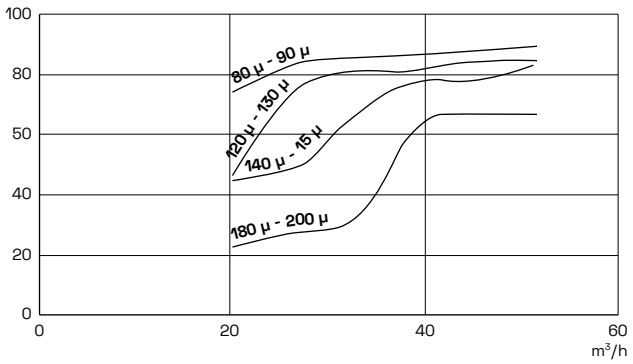

DIMENSIONS

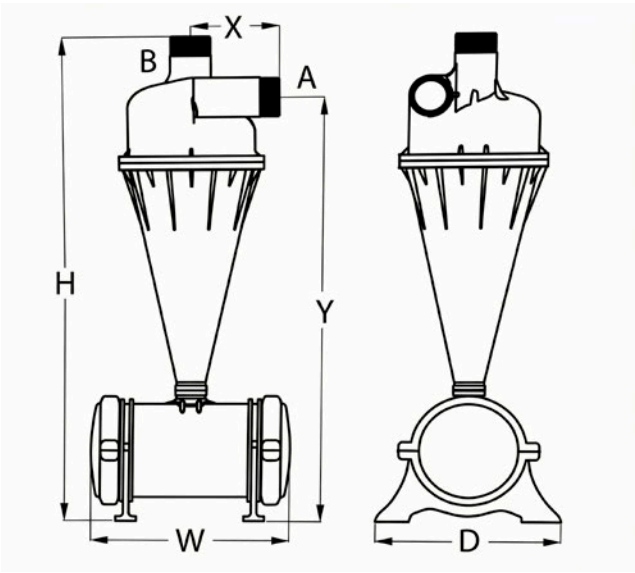

DN	H (MM)	W (MM)	D (MM)	X (MM)	Y (MM)
2"	1100	490	430	180	963
3"	1220	490	430	205	1070
4"	1440	520	524	250	1260