CLEANING PROGRAMMER ICD-200

The ICD-200 Cleaning Programmer is a modulating controller for 1 to 8 units designed for cleaning control of automatic filtration systems. It combines activation functions by time or by a built-in electronic differential pressure sensor. The model can be DC or AC with a keyboard for configuring parameters such as wash time and cycle limits.







MATERIAL CHARACTERISTICS

Housing: ABS Plastic

Control Panel: Liquid Crystal Display (LCD) and integrated keyboard.

Internal components: Electronic differential pressure sensor and internal circuits. OPERATING

CHARACTERISTICS

Pressure Difference Setting (DP SET): Range from 0.1 to **1.0 BAR.**

Activation Modes: By Pressure Difference (DP), by Interval Time, or by Manual Operation.

Power (DC Model): 1.5 V alkaline bank (4 units).

Power (AC Model): 110 V or 220 V (50 Hz or 60 Hz) with built-in 24 V AC transformer.

MODELS

CODE	OUTPUT	CAJA	VOLTAGE	UNITS/BOX	RRP (€)
12042003	2	PARED	9-12V LATCH	1	390
12042004	2	PARED	24V/AC	1	415

ACCESSORIES



cleaning programmer support		
CODE	MODEL	RRP (€)
14112014	SUPPORT	**30**



expansion card 2 outputs		
CODE	MODEL	RRP (€)
11023008	LATCH	**50**
11023009	24V/AC	**50**



LONG DISTANCE SOLENOID		
CODE	MODEL	RRP (€)
11021039	LATCH	**48**
11021032	LATCH	**48**
11021038	24/AC	**52**

DIMENSIONS

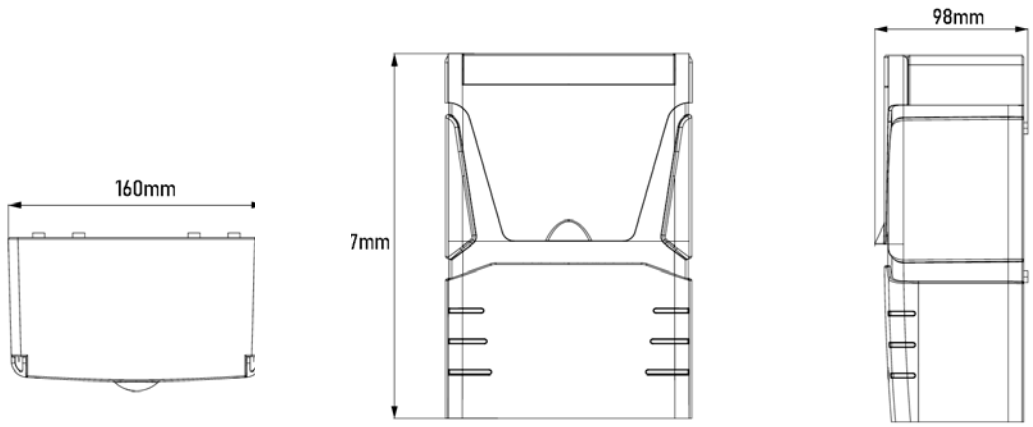

MEASURES	ALTO	ANCHO	DEEP
MM	237	160	98

INFORMATION

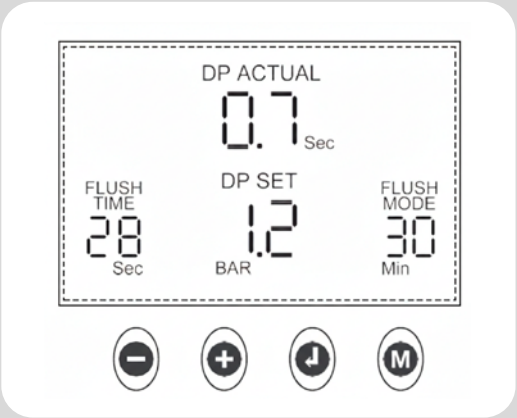

Enter button (Return arrow symbol): Activates editing mode: When pressed, the cursor will start flashing under the field that can be edited at that moment.

Navigation and Confirmation: Pressing ENTER again confirms the changes made to the current field and the cursor moves to the next editable field to continue configuration. Completion: It must be pressed several times until the cursor reaches the "time" and stops flashing to exit the editing mode and return to the operation interface.

"+" and "-" buttons: Value adjustment: Used to increase or decrease the numerical value of the field that is currently flashing.

Mode Button (Symbol "M"): Manual/Automatic operation modes outside of the setup menu. Configurable parameters on screen

Through these buttons you can manage the following fields visible in the diagram:

DP SET: Allows you to set the desired differential pressure value to activate the wash. FLUSH TIME: Set the duration or flushing time for each filter. FLUSH MODE / INTERVAL: Sets the interval time between backwashes if it is not activated by differential pressure.