DANFOSS DIFFERENTIAL PRESSURE SWITCH

The main function of the Danfoss CAS 155 is to monitor the pressure difference between two points of a system and activate or deactivate an electrical circuit when that difference reaches a preset value, mainly used for automatic filtration systems.







MATERIAL CHARACTERISTICS

Body/housing: Cast and enamelled aluminum.

Spring: stainless steel.

Pressure connection: nickel-plated brass

Internal gaskets/seals: Nitrile-butadiene rubber (NBR).

OPERATING CHARACTERISTICS

Contact Type: SPDT Micro Switch (Single Pole Change)

Contact load: Alternating current AC-14 / AC-15: 0,1 A to 220 V; DC continuous current- 13: 12 W to 125 V.

Typical pressure and temperature ranges: Diff pressure setting range: 0.2 - 2.5 bar

Reset function: Auto

Pressure connection type: Pressure connection: 1/4”

MODELS

CODE	MODEL	RRP (€)
12040009	DIFFERENTIAL PRESSURE SWITCH CAS155	336

ACCESSORIES

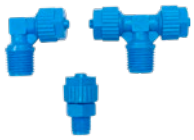

TEFEN ACCESSORY
SEE PAGE



expansion card 2 outputs		
CODE	MODEL	RRP (€)
11030002	LATCH	98
11030001	24V/AC	106



CLEANING SCHEDULER		
CODE	VOLTAGE	RRP (€)
11023078	LATCH	390
11023079	24V/AC	415

INFORMATION

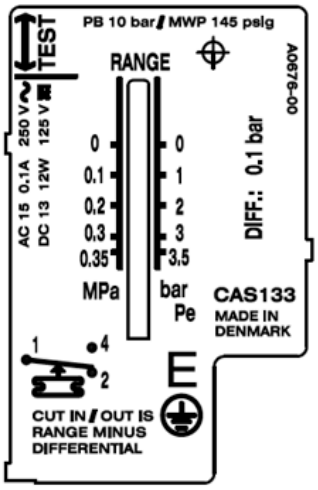

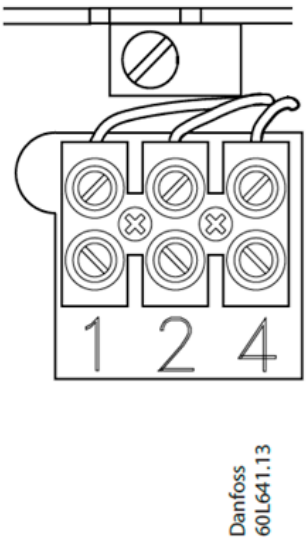

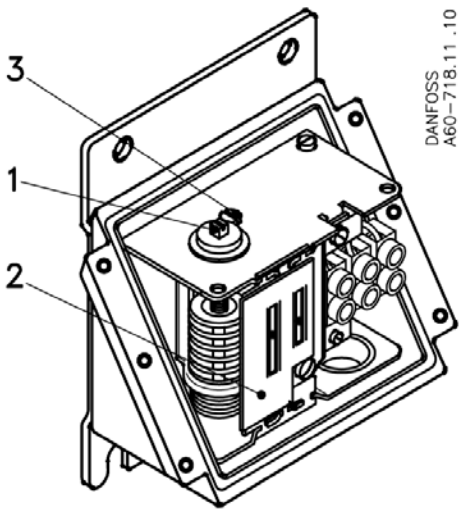

1. Eje de rango

2. Range scale

3. Tornillo de bloqueo