ELECTROAGITATORS MX-150 L

The MX-100 L electric agitator is designed to mix fertilizers and chemicals in irrigation tanks. Prepared to resist corrosion from fertilizers, both the propeller and the shaft are made of stainless steel.

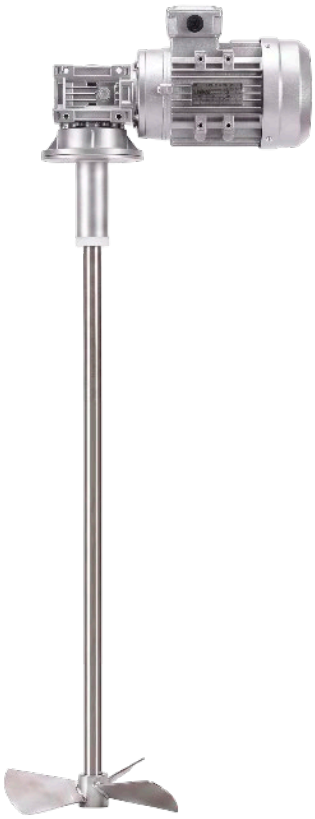





MATERIAL CHARACTERISTICS

Shaft: Stainless steel 316

Support: Aluminum

Bearing: Steel

Motor link: Nylon with fiberglass

Propeller: stainless 316

Seal: EPDM

OPERATING CHARACTERISTICS

AC Motors (Single-Phase and Three-Phase): 0.75cv to 2cv

Rotation Speed (RPM): 200 rpm options available

Standard Axle: Axles available from 500 mm to 1900 mm (maximum standard length).

MODELS

EJE	PROPELLER	POWER	MATERIAL	CODE SINGLE PHASE	RRP (€) SINGLE PHASE	CODE THREE-PHASE	RRP (€) THREE-PHASE
1400		0.33CV	INOX	**14111045**	**605**	**14111051**	**539**
1500		0.33CV	INOX	**14111046**	**715**	**14111052**	**649**
1600		0.33CV	INOX	**14111047**	**770**	**14111053**	**704**
1700		0.33CV	INOX	**14111048**	**825**	**14111054**	**759**
1800		0.33CV	INOX	**14111049**	**880**	**14111055**	**814**
1900		0.75CV	INOX	**14111050**	**935**	**14111056**	**869**
1400		0.75CV	INOX	**14111045**	**705**	**14111051**	**639**
1500		0.75CV	INOX	**14111046**	**815**	**14111052**	**749**
1600		0.75CV	INOX	**14111047**	**870**	**14111053**	**804**
1700		0.75CV	INOX	**14111048**	**925**	**14111054**	**859**
1800		0.75CV	INOX	**14111049**	**980**	**14111055**	**914**
1900		0.75CV	INOX	**14111050**	**1035**	**14111056**	**969**

DIMENSIONS

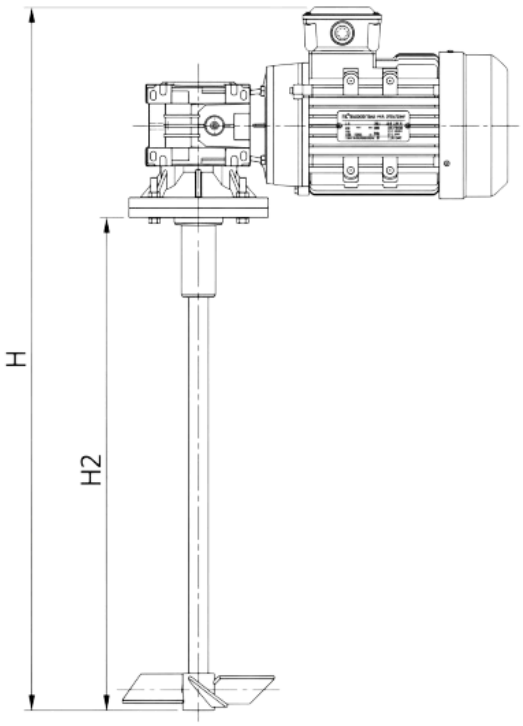

EJE	GUIA	A	H	H2	KG
1300	-				13,5
1400	1300				15.98
1500	1400				16.17
1600	1500				16.36
1700	1600				16.55
1800	1700				16.74
1900	1800				16.93

ACCESSORIES



STAINLESS LEVEL PROBE		
CODE	MODEL	RRP (€)
	1,5M	**145**



DIGITAL ON - OFF TIMER		
CODE	MODEL	RRP (€)
11030036	12V DC	**100**
11030037	220V	**100**



AGITATOR SUPPORT		
CODE	MODEL	RRP (€)
14112004	2 MET	**160**
14112005	1.1 MET	**130**