DOSING PUMP PM-200

PM-200 piston dosing pump 12v/DC designed to inject precise volumes of liquids or chemicals, through the movement of a piston that sucks and discharges the fluid in each cycle. Its flow rate is regulated by adjusting the length and frequency of the piston stroke, which allows exact and continuous dosing.







MATERIAL CHARACTERISTICS

Head and valves: Stainless steel

Piston: Ceramic or stainless steel

Gaskets: Viton

Internal components: Stainless steel and brass

OPERATING CHARACTERISTICS

Flow rate: 110 L/h to 304 L/h

Maximum pressure: up to 10bar

Maximum temperature: INOX head: up to 90 °C, PVC head: up to 40 °C

Ambient working temperature: +5 °C to +45 °C

Electric motor: 22AMP AND 32AMP maximum consumption

Hydraulic connections: Enter 1/4" and 3/4" depending on the model

MODELS

LITERS / H	BAR	HEAD	CONNECTION	CONSUMPTION	CODE	RRP (€)
120	10	INOX	3/8" G F	22 AMP	**13072125**	**1075**
120	15	INOX	3/8" G F	32 AMP	**13072126**	**1170**
230	6	INOX	1/2" G F	22 AMP	**13070019**	**1250**
220	10	INOX	1/2" G F	32 AMP	**13072127**	**1350**
304	8	INOX	3/4" G F	32 AMP	**13072128**	**1390**

ACCESSORIES



DOSING BENCH		
CODE	MODEL	RRP (€)
14112003	21X15X20	**55**



PULSE DAMPER		
CODE	MODEL	RRP (€)
12042005	1,2 LITERS	**96**



BACK PRESSURE Valve		
CODE	MODEL	RRP (€)
12042001	DN25	**102**

DIMENSIONS

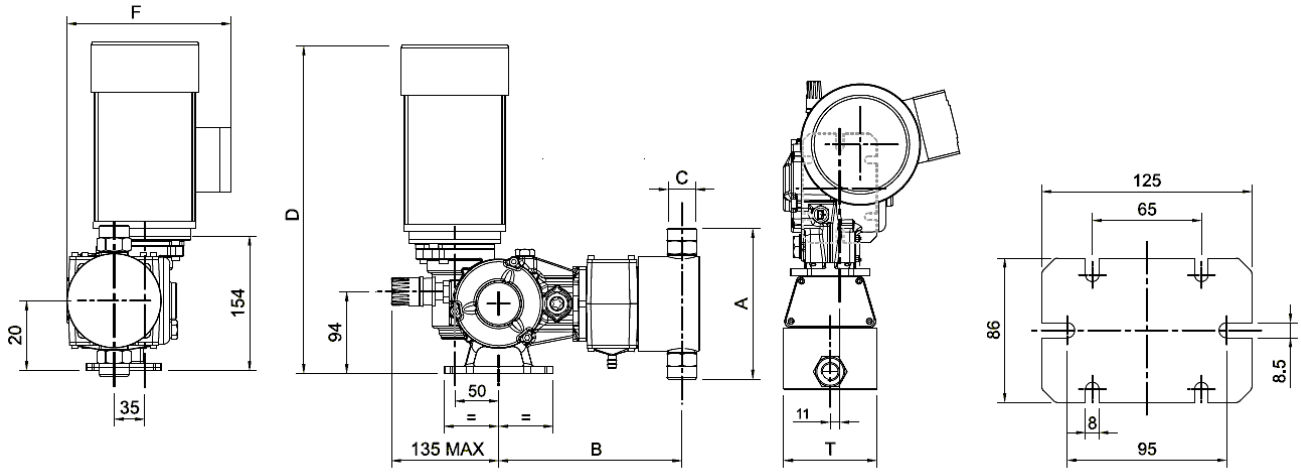

MODEL	A [MM]	B [MM]	C (BSP)	T [MM]	D [MM]	E [MM]	F [MM]
120L	164	210	3/8" f	88,5	480	390	215
220L	176	210	1/2" f	108	480	392	215
304L	195	215	3/4" f	103	480	401	215

hydraulic characteristics

DIAMETER PISTON (MM)	CARRERAS/ MIN	CAUDAL (L/H)	MAX PRESSURE (SS 316 - BAR)	CONNECTION (SS 316)	CONNECTION (PVC)	MOTOR (AMP)
38	116	120	10	3/8" GF	3/8" GF	22 AMP
38	116	120	15	3/8" GF	3/8" GF	32 AMP
54	116	230	6	1/2" GF	1/2" GF	22 AMP
54	116	220	10	1/2" GF	1/2" GF	32 AMP
64	116	304	8	3/4" GF	3/4" GF	32 AMP

MOTOR CONSUMPTION 12VDC

MODELS	1 BAR	2 BAR	3 BAR	4 BAR	5 BAR	6 BAR	7 BAR	8 BAR	9 BAR	10 BAR
120 l/h (Max 10b)	5.0 A	5.5 A	6.0 A	6.5 A	7.0 A	7.5 A	8.0 A	12.0 A	16.0 A	20.0 A (Máx)
230 l/h (Max 6b)	2.0 A	4.0 A	6.0 A	8.0 A	14.0 A	20.0 A (Máx)	-	-	-	-
230 l/h (Max 10b)	5.0 A	6.0 A	7.0 A	8.0 A	9.0 A	10.0 A	11.0 A	12.3 A	13.7 A	15.0 A (Máx)
304 l/h (Max 8b)	7.0 A	8.0 A	9.0 A	10.0 A	11.0 A	12.0 A	13.3 A	16.0 A (Máx)	-	-