AMIAD HYDRAULIC VALVE

The Amiad Chemical Valve is a normally closed (NC) valve designed for chemical applications in irrigation systems. Made of fiberglass-reinforced polypropylene, this valve offers high chemical and mechanical resistance. Ideal for handling aggressive liquids safely and effectively.









MATERIAL CHARACTERISTICS

Body: Fiberglass reinforced polypropylene

Spring: Stainless steel 316

Gaskets: Viton

Screws: Stainless steel

OPERATING CHARACTERISTICS

Valve type: Normally closed (NC)

Maximum working pressure: 20 bar

Minimum opening pressure: 1,5 bar

Connection: Male thread 3/4”

Drive: Hydraulic or electric via solenoid

Applications: Injection of chemical products, flow control in irrigation systems and industrial processes

MODELS

CODE	MODEL	RRP (€)
13076001	VAL 3/4”	117,66

ACCESSORIES







PQ INOX HYDRAULIC VALVE		
CODE	**MODEL**	**RRP (€)**
13076073	NC - 3/4”	**100**

METAL BASE IFLOW SOLENOID		
CODE	**MODEL**	**RRP (€)**
11021052	NC -24VAC	**48**

PQ AMIAD CHECK VALVE		
CODE	**MODEL**	**RRP (€)**
13076013	3/4”	**25,6**

PRESSURE LOSS

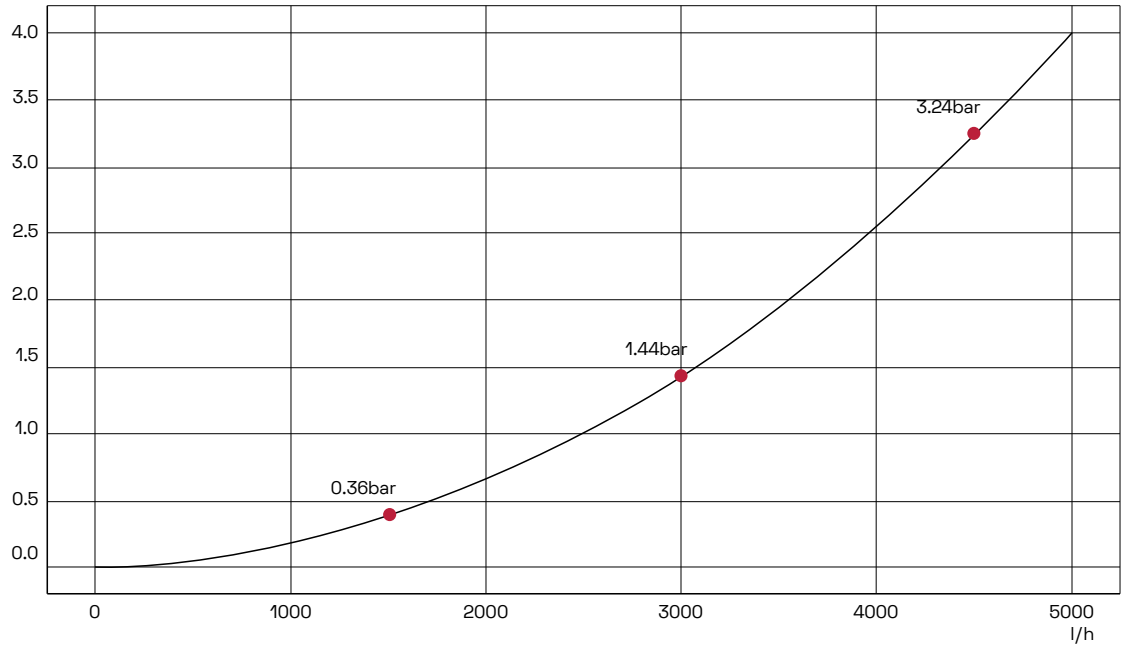

DIMENSIONS

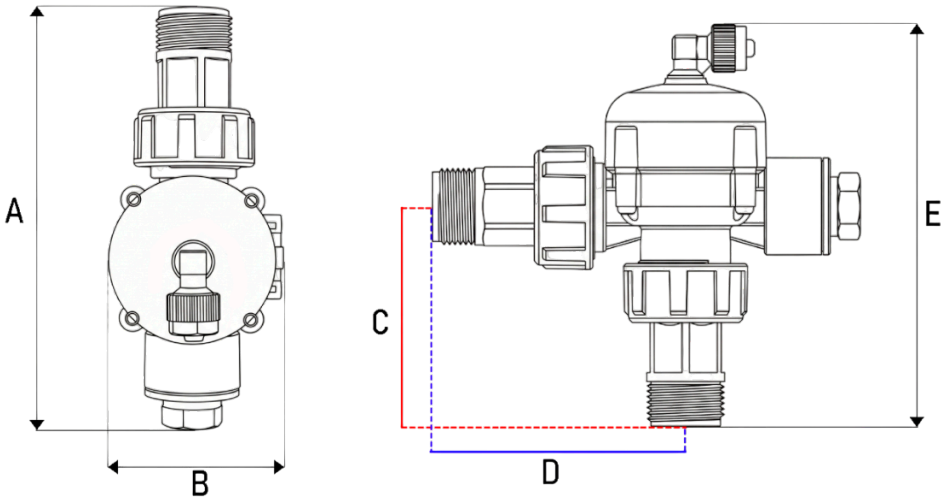

DN	A	B	C	D	E
3/4	140	54	73	82	129

CHEMICAL RESISTANCE

PRODUCT	RESISTANCE
Hydrochloric acid	All concentrations
Nitric acid	10% max.
Sulfuric acid	60% max.