SUPERTIF PC DRIPPER - PCND

The SuperTif uses a silicone diaphragm that adjusts to pressure changes to ensure a constant flow rate (self-compensating). This mechanism includes a continuous self-cleaning system that expels sediment, avoiding blockages during irrigation.







MATERIAL CHARACTERISTICS

Body and Lid: High-density polypropylene (resistant to UV rays and agricultural chemicals).

Diaphragm: High precision injected silicone (maintains long-term elasticity).

OPERATING CHARACTERISTICS

Working pressure: Generally operates in a range of 0.7 to 4.0 bar

Available flow rates: 2.2, 3.8, 7.8 (l/h).

Main functions:

PC (Self-compensating): Maintains uniform flow regardless of inlet pressure.

ND (Non-Drain): The dripper automatically closes when the pressure drops.

MODELS

SELF-COMPENSATING				
CODE	**LITERS/H**	**COLOR**	**BOX UNITS**	**RRP (€)**
15157039	2.2	BLACK / BROWN	4000	**0,22**
15157040	3.8	BLACK / BROWN	4000	**0,22**
15157041	7.8	BLACK / BROWN	4000	**0,22**

SELF-COMPENSATING-ANTIDRAINING				
CODE	**LITERS/H**	**COLOR**	**BOX UNITS**	**RRP (€)**
15157042	2.2	BROWN / BROWN	4000	**0,22**
15157043	3.8	BROWN / BLACK	4000	**0,22**
15157044	7.8	BROWN / GREEN	4000	**0,22**

DIMENSIONS

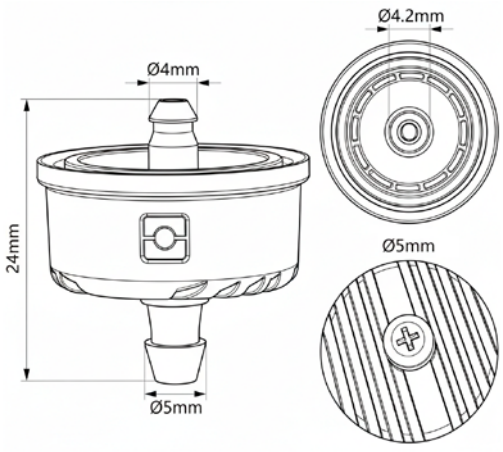

TECHNICAL INFORMATION

TYPE OF DRIPPER FLOW (L/H)		BASE COLOR	Cover Color	Min. pressure (m)	Max. pressure (m)	Sealing pressure (m)	QUANTITY (BAG)	QUANTITY (BOX)	Product number
Supertif PC	2.2	Negro	Marrón	6	35	-	1000	4000	201015523
	3.85	Negro	Negro	6	35	-	1000	4000	201015524
	7.8	Negro	Verde	6	35	-	1000	4000	201015525
	12	Negro	Rojo	6	35	-	1000	4000	201015526
	25	Negro	Orange	10	35	-	1000	4000	201015527
Supertif PCND	1.1	Marrón	Light gray	7	35	1.5	1000	4000	201015528
	2.2	Marrón	Marrón	7	35	1.5	1000	4000	201015531
	3.85	Marrón	Negro	7	35	1.5	1000	4000	201015533
	7.8	Marrón	Verde	7	35	1.5	1000	4000	201015534