BUTTERFLY VALVE PNEUMATIC ACTUATOR

The butterfly valve with pneumatic actuator is designed to cut off or regulate the flow of liquids automatically and quickly using compressed air. The pneumatic actuator allows remote operation by pneumatic signal, without manual effort, being ideal for automated systems of air, water, chemicals and industrial processes.



MATERIAL CHARACTERISTICS

Lentil: AISI stainless steel 304.

Body: Ductile iron with epoxy coating.

Shaft: AISI stainless steel 304.

Closing gaskets: EPDM.

Pneumatic actuator: Anodized aluminum body.

Screws: Stainless steel.

OPERATING CHARACTERISTICS

Actuation: By means of double-acting or single-acting pneumatic actuator (spring return).

Control air pressure: 5 to 8 bar.

Operation: Opening and closing at 90°, with visual position indicator.

Control: On/Off, adaptive

MODELS

SIZE	CONNECTION	SIMPLE CODE	RRP (€) SINGLE	DOUBLE CODE	RRP (€) DOUBLE
50	2”	**19195075**	**consult**	**19195067**	**consult**
65	2-1/2”	**19195076**	**consult**	**19195068**	**consult**
80	3”	**19195077**	**consult**	**19195069**	**consult**
100	4”	**19195078**	**consult**	**19195070**	**consult**
125	5”	**19195079**	**consult**	**19195071**	**consult**
150	6”	**19195080**	**consult**	**19195072**	**consult**
200	8”	**19195081**	**consult**	**19195073**	**consult**
250	10”	**19195082**	**consult**	**19195074**	**consult**

ELECTRIC ACTUATOR Dimensions

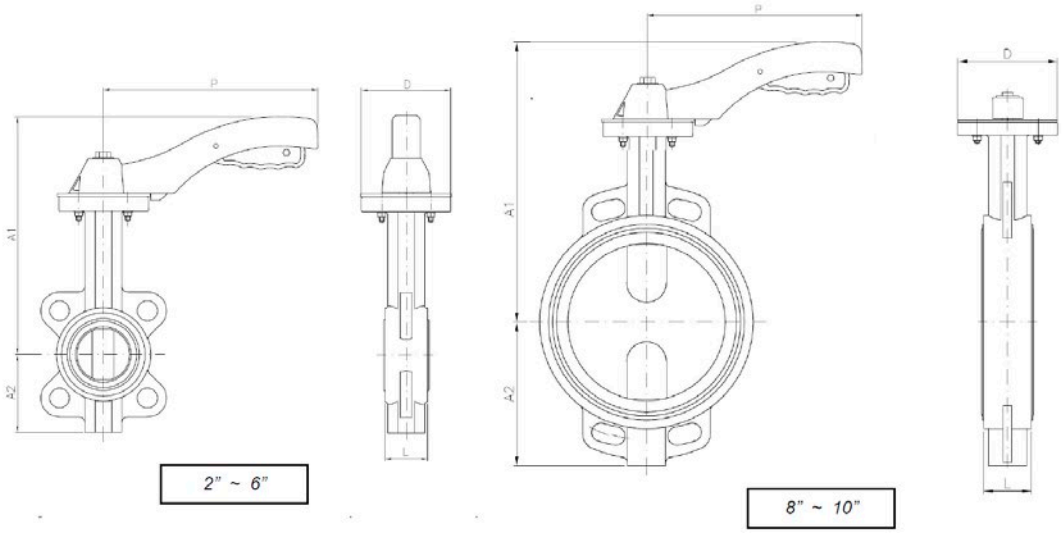

SIZE	DN	PN	L	A1	A2	J	P	(KG)
2"	50	16	43	238	70	***	170	2,8
2 ½"	65	16	46	238	80	***	170	3,3
3"	80	16	46	238	100	***	170	3,8
4"	100	16	52	270	115	***	215	5,8
5"	125	16	56	300	135	***	215	7,4
6"	150	16	56	300	150	***	215	8,35
8"	200	16	60	280	180	***	300	14,4
10"	250	16	68	330	215	***	300	21,8

VALVE Dimensions

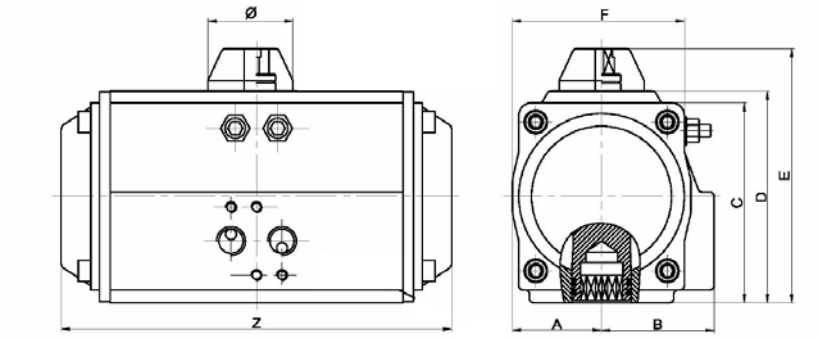

MODEL	A	B	C	D	E	F	Z	Ø	AIR CONNECTION
GNP14	28.5	36.5	60	-	90	52	122	55	NAMUR G1/4"
GNP24	30	41.5	65.5	72	102	65	147	55	NAMUR G1/4"
GNP44	36	47	81	87.5	117.5	72	168	55	NAMUR G1/4"
GNP60	42	53	94	99.5	129.5	81	184	55	NAMUR G1/4"
GNP94	46	57	98.5	108.7	138.7	92	204	55	NAMUR G1/4"