BALL VALVE

Ball valve designed to open, close or regulate the flow of liquids in pipes. Suitable for hot and cold water, compressed air. Available in H-H, T and M-H configurations, with ½" connections to 2", adaptable to different installation schemes.







MATERIAL CHARACTERISTICS

Body: Chromed brass

Internal ball: Polished chrome brass

Rings: Teflon (PTFE)

Shaft: Brass

Handle: Plastic-coated steel

OPERATING CHARACTERISTICS

Working temperature: –10 °C to +130 °C

Maximum pressure: PN25 (½" to 2")

Available types: H-H, T and **M-H**

Connections: 1/2" to 2" female or male thread depending on model

MODELS

CODE	SIZE	CONNECTION	PN	THREAD	UNITS/BOX	RRP (€)
19195101	15	1/2"	16	M-H	1	**5**
19195102	20	3/4"	16	M-H	1	**7**
19195103	25	1"	16	M-H	1	**12**
19195104	30	1-1/4"	16	M-H	1	**19**
19195105	40	1-1/2"	16	M-H	1	**26**
19195106	50	2"	16	M-H	1	**39**
19195003	15	1/2"	16	H-H	1	**5**
19195004	20	3/4"	16	H-H	1	**7**
19195005	25	1"	16	H-H	1	**12**
19195006	30	1-1/4"	16	H-H	1	**19**
19195007	40	1-1/2"	16	H-H	1	**26**
19195008	50	2"	16	H-H	1	**39**

DIMENSIONS

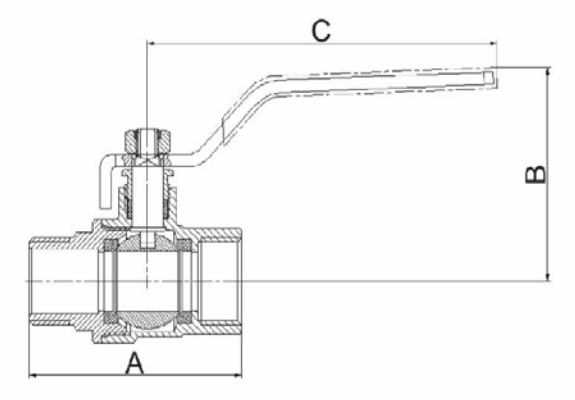

FEMALE - FEMALE CONNECTION			
SIZE	A	B	C
DN15	55.5	49	90
DN20	62	54.5	90
DN25	71	61	110
DN32	92	65	110
DN40	97.5	117	140

MALE - FEMALE CONNECTION			
SIZE	A	B	C
DN15	49	49	90
DN20	56	54.5	90
DN25	62	61	110
DN32	78	65	110
DN40	85.7	117	138