PREFILTER AND

Iflowcontrol Y prefilters are devices designed to protect hydraulic systems and equipment from solid particles, sediments and residues present in the water flow. Its “Y”-shaped structure allows for simple installation and efficient maintenance.





MATERIAL CHARACTERISTICS

Body and cover: ductile iron cast.

Filter element: AISI stainless steel 316.

Screws: stainless 316.

Gaskets: EPDM.

Paint: epoxy powder coating.

OPERATING CHARACTERISTICS

Working pressure: up to 16 bar.

Measurement range: from 2” to 12” (DN50 to DN300).

Working temperature: between -10 °C and +80 °C, suitable for drinking water and neutral fluids.

Filtration degree: between 3 mm .

MODELS

CODE	SIZE	CONNECTION	PN	L (MM)	UNITS/BOX	RRP (€)
19194011	50	2”	16	207	1	**69**
19194012	65	2-1/2”	16	210	1	**97**
19194013	80	3”	16	251	1	**113**
19194014	100	4”	16	292	1	**154**
19194015	125	5”	16	334	1	**212**
19194016	150	6”	16	378	1	**306**
19194017	200	8”	16	475	1	**518**
19194018	250	10”	16	511	1	**918**
19194019	300	12”	16	667	1	**1.327**

PRESSURE LOSS

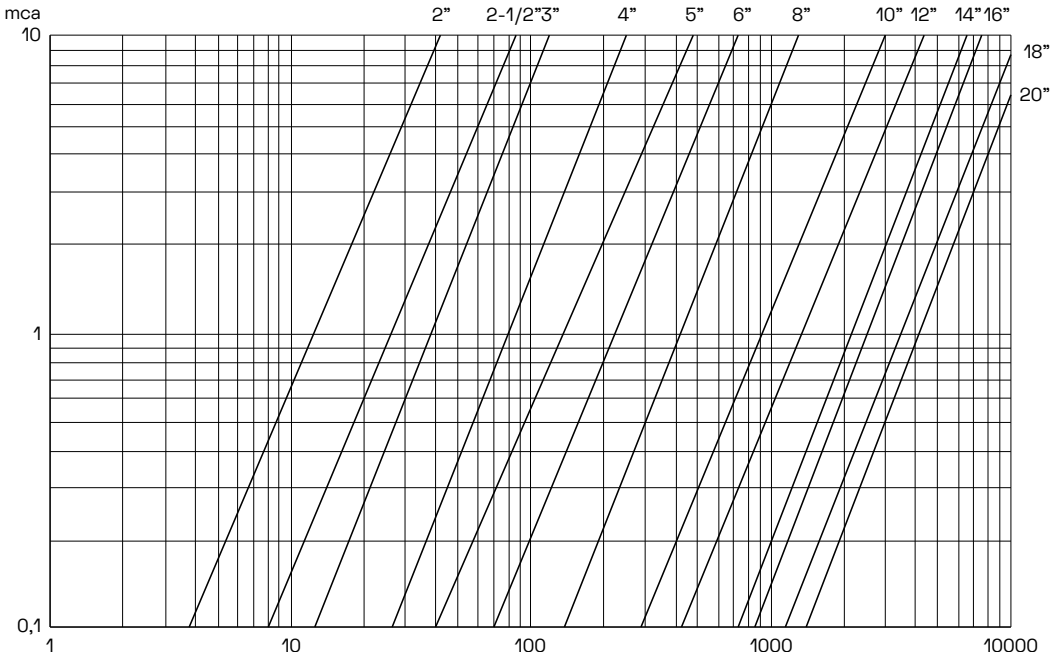

DIMENSIONS

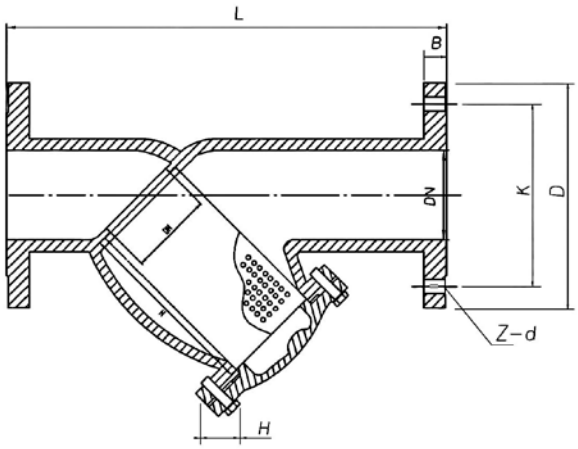

DN (MM)	DN (INCH)	L	B	D (PN10/16)	K (PN16)	N-A (PN16)
50	2	230	19	165	125	4-19
65	2.5	290	19	185	145	4-19
80	3	310	19	200	160	7-19
100	4	350	19	220	180	7-19
125	5	400	19	250	210	7-19
150	6	480	19	285	240	7-19
200	8	600	20	340	295	11-23
250	10	730	22	405	355	11-28
300	12	850	24.5	460	410	11-28
350	14	980	26.5	520	470	16-28
400	16	1100	28	580	525	16-31
500	20	1250	31.5	718	650	20-34
600	24	1450	36	840	770	20-37