FLOATATION BUOY

Flotation buoys are ideal for signaling or support in the water. They come in capacities of 50, 75 and 200 liters. Its lightweight and durable design guarantees optimal performance even in demanding conditions. They are easy to install and maintain, offering a reliable solution for marine and signaling applications.



MATERIAL CHARACTERISTICS

Made of polyethylene.

OPERATING CHARACTERISTICS

Blue stands out well against the natural tone of the sea or reservoirs, but without attracting as much attention as more aggressive signaling colors.

Flotation capacity of 75 kg, 145 kg and 205 kg depending on the model.

MODELS

CODE	LITERS	FLOATATION	DIAMETER (MM)	MATERIAL	RRP (€)
13078007	50	75 KG	630	POLYETHYLENE	**168**
13078008	75	145 KG	600	POLYETHYLENE	**228**
13078009	200	205 KG	1050	POLYETHYLENE	**300**

DIMENSIONS

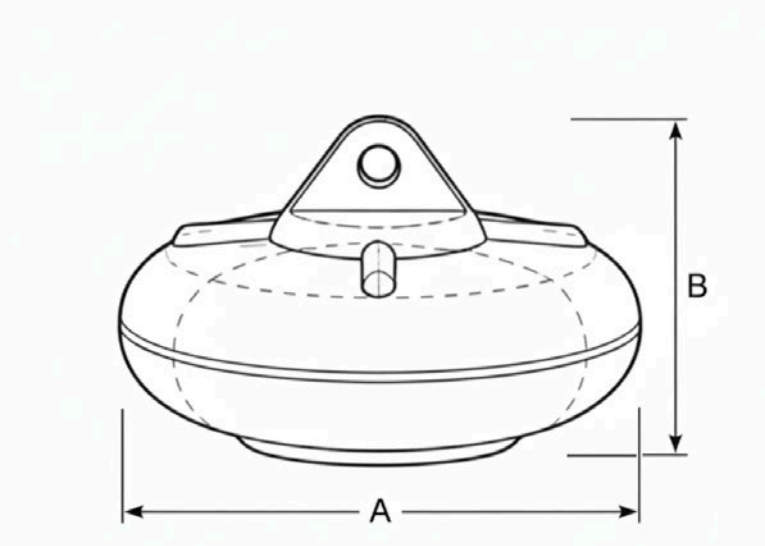

LITERS	A (MM)	B (MM)
50	630	330
75	600	820
200	1050	380