WD MULTI-JET WATER METER

The WD multi-jet meter is a robust and accurate water meter, ideal for residential and industrial applications. Its design divides the flow into multiple jets to drive a turbine, ensuring stable and reliable measurement even in the face of fluctuating flow rates.







MATERIAL CHARACTERISTICS

Body: Highly durable brass.

Mechanism: High resistance acetal plastic.

Cover and Totalizer: Transparent thermal plastic, resistant to impacts and high temperatures.

OPERATING CHARACTERISTICS

Operating Temperature: Supports cold water up to 30 °C

Maximum Working Pressure: Supports up to 16 bar

Totalizer: IP68, 5 digits, dry type with magnetic transmission, hermetic and adjustable 360°.

Prepared for transmitter: Compatible with reed pulse systems.

MODELS

CODE	SIZE	CONNECTION	Q M3	R (Q3/Q1)	UNITS/BOX	RRP (€)
10002040	20	3/4"	2.5	R160	10	**71**
10002041	25	1"	3.5	R160	5	**122**
10002042	30	1-1/4"	6	R160	5	**139**
10002043	40	1-1/2"	10	R160	4	**231**
10002044	50	2"	15	R160	1	**260**

ACCESSORIES







PULSE EMITTER wd		
CODE	MODEL	RRP (€)
10013019	EMISOR REED WD	**42**

PULSE TOTALIZER		
CODE	MODEL	RRP (€)
10011043	TOTALIZA-DOR	**99**

UNIONS
SEE PAGE

PRESSURE LOSS

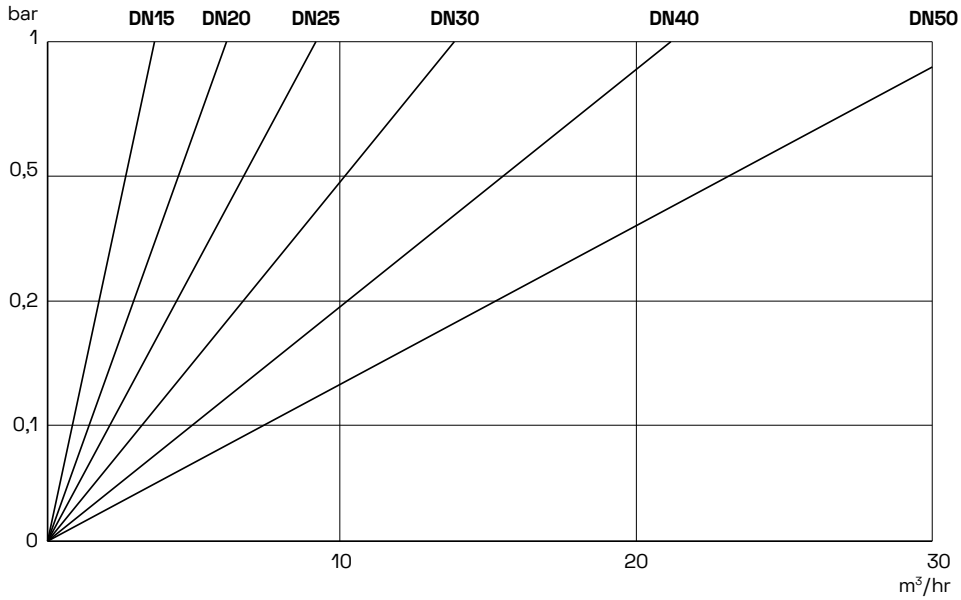

DIMENSIONS

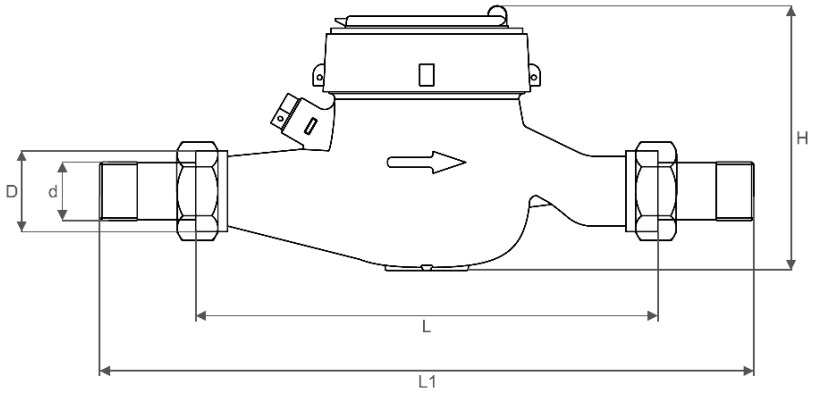

DN	L	L1	D	D	H
20	190	294	G1B	R*/	107,5
25	260	380	G1'/<B	R1	117,5
32	260	384	G1'/zB	R1'/4	117,5
40	300	431	G2B	R1'/z	141,5
50	300	448	G2'/zB	R2	177

FLOW RATE

DN	CONNECTION	CAUDAL DE OVERLOAD	FLOW RATE PERMANENT	CAUDAL DE TRANSITION	MINIMUM FLOW
		Q4 m3/h	Q3 m3/h	Q2 dm3/h	Q1 dm3/h
20	3/4"	5	4	0,032	0,02
25	1"	7,88	6,3	0,0504	0,0315
32	1-1/4"	12,5	10	0,08	0,05
40	1-1/2"	20	16	0,128	0,08
50	2"	31,3	25	0,2	0,125